Optical Systems for the Paladin Experiment

To demonstrate an amplifier for an optical free-electron laser, we must have an input beam of coherent laser light oscillating in the correct mode and appropriate optical diagnostic instruments.

For further information contact John L. Miller (415) 422-6174.

The Laboratory's Paladin experiment involves measuring the properties of a free-electron laser (FEL), which acts as an optical amplifier of the laser beam. In some ways, this FEL amplifier is similar to traditional laser amplifiers. It needs a particular kind of optical input, it exhibits gain over a relatively narrow resonance bandwidth, and it amplifies a small input signal exponentially until the power approaches saturation level.

In other ways, however, an FEL is very different from other lasers. Because damage to lenses and other optical components depends on the optical power density, the only way to achieve high output power in other lasers is to spread the beam over a wide area, generally 10 cm in diameter or more. However, an FEL operates in a vacuum and has no output lens, and its active volume can be no wider than the electron beam that powers it (no more than a few millimetres in diameter). As a result, the output beam in a high-power FEL is very narrow and has an extremely high power density.

Another difference between an FEL and other lasers is in the factors controlling its fundamental frequency. The frequencies of most lasers are determined by the relatively unchangeable electronic structure of their constituent atoms or molecules. The central frequency of the FEL resonance is not fixed, however, but can be tuned by varying the electron-beam energy or the wiggler magnetic field.

The saturation characteristics of FELs are also quite different from those of typical lasers, which exhibit linear gain after they reach the saturation point. An FEL whose wiggler has a uniform magnetic field has no such linear regime. Saturation imposes a power limit because the electrons in the beam slow down and change the resonance frequency. However, it is possible to increase the output power beyond the saturation limit by tapering the wiggler's magnetic field appropriately, thus retuning to the new resonance frequency.

The output intensity of a typical laser amplifier can be no more uniform than that of its input beam, whereas a high-gain FEL can, in theory, clean up some of the aberrations present in the input beam. Theory also predicts that a high-gain FEL may be able to guide its high-intensity optical beam, allowing the FEL amplifier to be much longer than the characteristic length for beam expansion due to diffraction (the Rayleigh range). Other unusual features of FEL amplifiers include optical emission at harmonics of the resonant frequency and an instability

that can lead to the growth of sidebands at frequencies above and below the frequency of the amplified signal. The Paladin experiment is designed to investigate these many unusual theoretical aspects of an optical free-electron laser.

Requirements for Optical Input

Table 1 lists the basic requirements for the optical input beam used in the Paladin experiment and Fig. 1 shows the optical system. The design limits of the wiggler and the energy of the Advanced Test Accelerator's electron beam (up to 50 MeV) constrained the range of resonant wavelengths to a broad band in the infrared that includes the strong P(20) line of the carbon-dioxide laser at 10.6 μm. The input beam's spectral width (wavelength variations) must be much less than the width of the FEL resonance. The diameter of the optical beam must match that of the electron beam, and the beam must be focused to have a waist near the start of the wiggler. The control and regulation of beam pointing and centering must be accurate enough to keep the optical beam superimposed on the electron beam all the way down the length of the wiggler.

The beam tube in the wiggler has an inside diameter of 2.5 cm (no more than three beam diameters), and will eventually be 25 m long. This extreme length-to-diameter ratio means that the divergence of the optical beam must be close to the diffraction limit for the beam size, i.e., most of the beam energy must be in a fundamental (TEM_{00}) beam mode. Otherwise, without optical guiding, the optical beam would expand out of the electron beam into the wall of the beam tube only 5 m from the entrance, since the Rayleigh range for the optical beam is about 5 m.

In our initial experiments, using only one 5-m wiggler segment, we will investigate the exponential gain regime in the FEL amplifier with an optical peak input power of about 1 MW. In our later experiments, using wigglers up to 25 m long, we will operate the device in the high-intensity regime, at which significant energy will be extracted from the electron beam. These experiments require peak input-beam power in the gigawatt range.

Several of the requirements imposed on the input beam are of less fundamental importance but serve to simplify the interpretation of amplifier measurements. It is useful to have low timing jitter and a good match between the input pulse length and the gain pulse length because it increases the accuracy of gain measurements based on pulse energies. Good intensity repeatability also makes measurements of gain more accurate. In addition, it is helpful for the frequency content of the input to be consistent.

Characteristics of Optical Output

To study the performance of the FEL amplifier, we need to measure the properties of the wiggler's optical output. These include measurements of the gross output energy and the power as a function of time to determine the amplifier gain, of the output beam's spatial intensity distribution to observe input-beam cleanup and optical guiding, and of its spectral content to study harmonic emission and the growth of sidebands.

We will also measure the properties of the spontaneous light (light produced in the wiggler with electron beam alone) for the insights it can provide about the device. For example, the spectrum of this spontaneous light can help us locate the FEL resonance.

Table 1 Parameters of the input optical beam required for the Paladin experiment, our optical free-electron laser experiment.

Wavelength	10.6 μm
Frequency stability	0.1 %
Beam diameter	10 mm
Beam divergence	<1.2 mrad
Centering stability	0.4 mm
Pointing stability	0.1 mrad
Pulse length	50 ns
Peak power	1 MW–1 GW

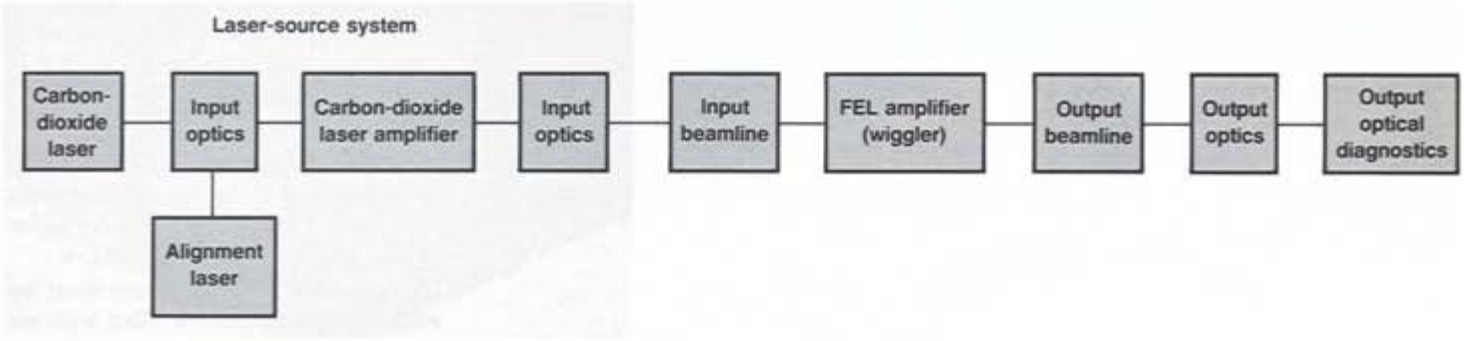

Fig. 1

Block diagram of the Paladin optical system, showing the laser-source system, the input and output beamlines, and the output diagnostics. The laser-source system consists primarily of a carbon-dioxide laser followed by a carbon-dioxide laser amplifier. A low-power helium-neon laser facilitates alignment by providing a visible beam colinear with the infrared output of the carbon-dioxide source.

Paladin Optical System

The block diagram of the Paladin optical system (Fig. 1) shows its major components, including a laser system to provide the input beam, together with its associated focusing, pointing, and centering optics; optical beamlines leading to and from the wiggler; and diagnostic instruments to measure the optical output. Auxiliary systems provide control and data acquisition, mechanical support, and vacuum and gas handling.

The carbon-dioxide laser (see Fig. 2), an oscillator-amplifier system, provides the input beam for the initial experiments. Incorporating both pulsed and continuous-gain media, the laser produces optical pulses with an energy of 250 mJ in the TEM_{00} mode at a 1-Hz repetition frequency.

The oscillator is designed to ensure good power repeatability and frequency stability. The length of the resonator is actively stabilized for operation in a single longitudinal mode. An electro-optical modulator switches 50-ns slices out of the oscillator's main pulse and shapes them actively to produce flat-topped pulses with short rise and fall times and low timing jitter. Propagating these pulse slices through two carbon-dioxide laser preamplifiers raises them to the required energy.

To simplify alignment of the laser beam with the wiggler beamline, we use a dichroic mirror to combine the output from the carbon-dioxide laser with the continuous, readily visible beam of red light from a low-power helium-neon laser. Although this alignment system is merely a convenience in our initial experiments, it will be absolutely essential when we extend the wiggler beyond 5 m.

We expect the interaction with the electron beam to help confine the infrared beam inside the wiggler's beam tube when the FEL amplifier is operating. When we are aligning the system, however, this help will not be available and the infrared beam will expand so that its edges disappear into the sides of the tube. The red light, with its shorter wavelength, has a much lower divergence and can pass through the tube without being clipped. If we make sure that the red and infrared beams are colinear, aligning on the red beam will set things up properly for the infrared beam. Furthermore, we can actively control the pointing of the input beam during FEL operation, using feedback based on the location of the red alignment beam after it has propagated through the beamlines to the output diagnostic instruments.

For the later experiments on the full-length wiggler, we will need to add a high-power amplifier to the carbon-dioxide laser to boost the pulse energy to about 50 J. The requirement that the input laser beam must have nearly diffraction-limited divergence places severe constraints on the amplifier, since it means that we must keep the optical energy density (fluence) from becoming large with respect to the saturation fluence to avoid spatial distortion of the beam. Unfortunately, this prevents efficient energy extraction from the amplifier.

To keep within this constraint, we limit the fluence at the amplifier output to about twice the saturation fluence. For a 50-J output, this requires an amplifier aperture of 20 cm. To use the carbon-dioxide laser as a drive source, we need an active length of 1 m for a two-pass amplifier configuration.

A built-in set of diagnostic instruments monitors the optical-pulse power of the laser-source system and facilitates set-up and calibration. The laser-source system also includes a variable-magnification telescope for adjusting the size and location of the beam waist near the wiggler input.

Figure 3 shows the evacuated optical beamlines leading from the laser source and the optical diagnostic instruments down to the 5-m wiggler in the Advanced Test Accelerator (ATA) tunnel. The beamlines must be evacuated; if they were filled with air, random density gradients would make the beam waver over its relatively long propagation path (25 m). Since the beam is focused near the input end of the wiggler, its radius decreases

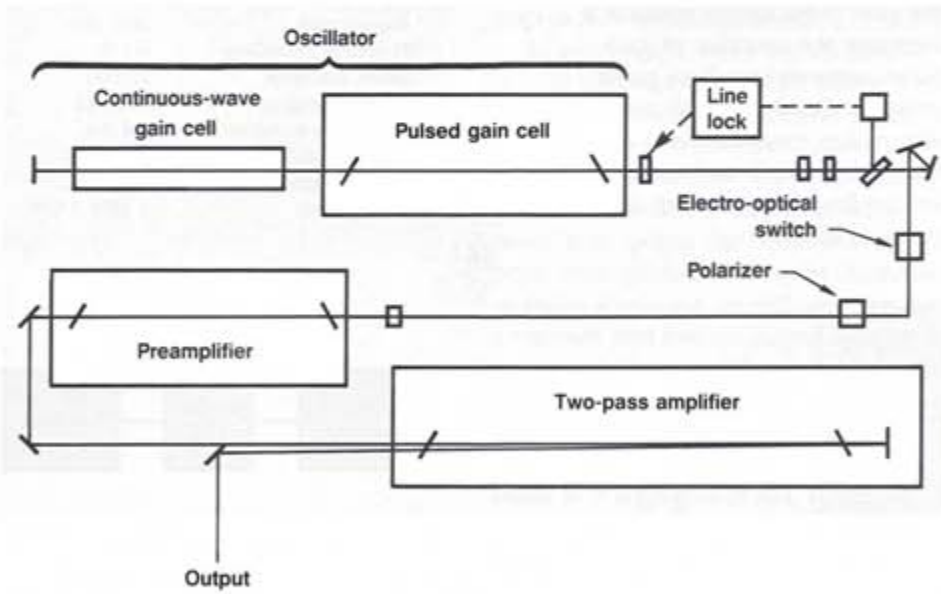

Fig. 2

The carbon-dioxide laser is made up of continuous and pulsed lasers. An electro-optical switch extracts 50-ns slices out of the laser's main pulse and feeds them into a preamplifier and a two-pass amplifier from which they emerge with enough energy to serve as optical input for the FEL amplifier.

as it propagates down the input line and increases again as it propagates up the output line.

Near the wiggler, where the diameter of the output beam is small, the optical fluence will be large enough to crack and otherwise damage windows. However, we need windows to get the beam out of the vacuum without letting the air in. To avoid damaging these windows, we must make them out of damage-resistant material (sodium chloride, which has the highest pulse-damage threshold of any material transparent to 10-μm infrared light) and place them far enough from the wiggler to spread the beam over a large enough area to reduce the fluence below salt's damage threshold.

Optical damage is also a potential problem for the turning mirrors that have to be near the wiggler. Even for bare copper mirrors, which have the highest pulse-damage threshold of any reflector for use at 10 μm, we need to have the light polarized in the right plane ("s" polarization, with the electric field perpendicular to the plane of incidence) to avoid damage where the beam is small.

For ease in aligning the optical beam with the wiggler axis, we use insertable alignment apertures located near the wiggler's entrance and exit. We view these apertures remotely using line-of-sight television cameras.

When it is time to install the additional lengths of wiggler, we will extend the output beamline to place the turning mirrors at the end of the ATA tunnel. The resulting beam

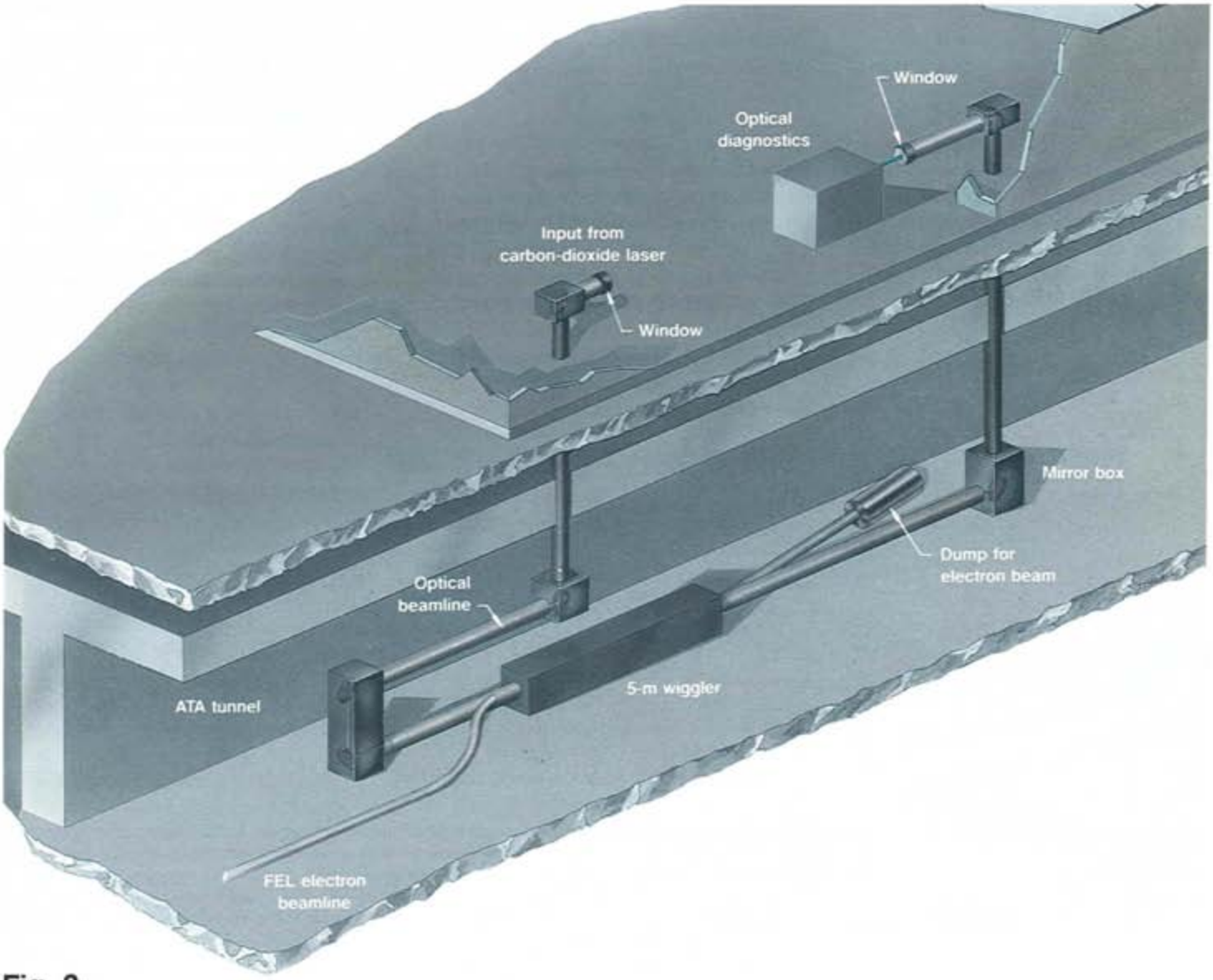

Fig. 3

The initial beamline arrangement brings the infrared beam from the carbon-dioxide laser source down to the short (5 m) wiggler in the ATA tunnel and takes the output beam back up to the diagnostics. The beamlines are evacuated so that the input beam will go straight and steady and the output beam will not damage the window. When we install the rest of the wiggler, the output beamline will need to be extended to match.

expansion will allow the mirrors to survive much higher beam energies.

We have provided a wide variety of output diagnostic instruments, arranged with enough flexibility to accommodate changes as the experiment progresses. Figure 4 shows a typical layout for output optics and diagnostics for the initial experiments. It includes a large-aperture, absorbing-thermopile calorimeter to measure the total energy of the beam pulse and a pair of wedged beam splitters made of sodium chloride for sampling the beam reproducibly. A telescope concentrates the faint sample into a small spot whose size and power is compatible with more delicate optical components and instruments.

Figure 4 shows one sample beam being focused onto a fast pyroelectric detector to measure the time dependence of the optical power. Another sample goes into an imaging detector (an array of slow pyroelectric detectors) to observe the spatial distribution of the beam intensity. The equipment needed for alignment control (a dichroic beam splitter and a quadrant detector) are not shown. Another instrument available for optical measurements is a monochromator with a detector and order-sorting filters for obtaining spectrally resolved data.

It is hard to achieve simultaneous spatial and temporal measurements with good resolution in the infrared. However, we can obtain some time-resolved information on intensity distribution with a simple array of fast detectors. An example of this capability is a quadrant array for measuring beam steering during the pulse.

We use the ATA's system of transient digitizers and video processors to acquire data from the optical diagnostic instruments and convert it to usable form. Similarly, we use the ATA's control system to manage the basic laser system functions. This arrangement allows us to run the FEL amplifier experiments from the ATA control room and to integrate the optical data with the electron-beam data.

Summary

The optical characteristics of the FEL amplifier impose a number of challenging constraints. Most of the energy of the input beam must be in the fundamental TEM_{00} mode, a very stringent limit on beam quality. For our initial experiments with a short wiggler, we will need a peak input energy of about a megawatt. In later experiments in the high intensity regime with wigglers up to 25 m long, we expect to use a 1-gigawatt peak-input beam. We have designed the optical systems for the Paladin experiment to deliver a stable input beam and provide a flexible set of output diagnostic measurements.

Key Words: Advanced Test Accelerator (ATA); free-electron laser (FEL); Paladin experiment—optical systems; wiggler.

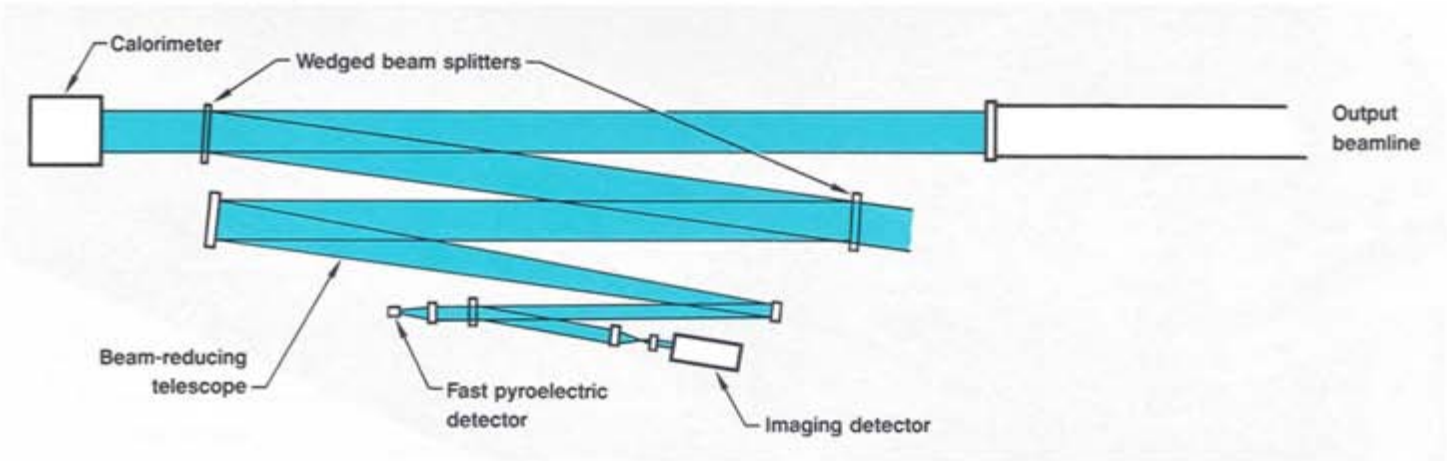

Fig. 4

In a typical arrangement of output diagnostic instrumentation for the Paladin experiment, essentially all of the output beam will go through a window of sodium chloride and into a large absorbing-thermopile calorimeter to measure total beam energy. A small fraction of the beam reflects from the window, which is wedge shaped to preclude multiple reflections, and into a second wedged beam splitter for further attenuation. This faint sample of the full beam then goes into a reducing telescope that directs some of it into a fast pyroelectric detector to measure the change of optical power with time. The rest of the beam reflects into a slow pyroelectric detector array to determine the spatial distribution of the fluence.