Induction Linear Accelerator for the Free-Electron Laser

New requirements for driving a high-power, free-electron laser amplifier, including a bright electron beam and high repetition rates, have led us to completely redesign the source of electrons (injector), the accelerator cells, and the pulsed-power drive for the induction linear accelerator.

For further information contact Louis L. Reginato (415) 422-7872 or Daniel L. Birx (617) 547-1122.

A free-electron laser (FEL) system contains five major components. In a high-power system, the components are a laser master oscillator, an electron source, an electron accelerator, an amplifier, and an electron-beam dump. The FEL amplifier converts the energy of an electron beam into coherent electromagnetic radiation (see the physics article beginning on p. 8). We have carefully designed the induction linear accelerator to optimize its performance as an electron source for the FEL. In this article, we highlight some of our technological advances in producing the most recent generation of induction linear accelerators.

In the past, our major application of the induction linear accelerator has been to produce high-current (10-kA), short (50-ns) pulses to investigate the propagation of intense, self-focused beams through the atmosphere. Such research will continue in the near term. However, our emphasis has now shifted to the conversion of high-quality electron-beam energy directly to laser radiation.

Accelerator requirements for the FEL are quite different from those for the higher-current charged-particle beam (CPB). Use as the driver for a high-power FEL imposes four basic requirements on the accelerator:

- Electron-beam emittance must be low (or beam brightness must be high, as we will explain later in this article).
- The drive must be capable of high repetition rates (that is, in the multikilohertz range) if high average powers are desired; hence, system efficiencies must be high.
- Growth of the beam-breakup instability must be extremely low (that is, the beam must be stable throughout the acceleration process).
- Energy variation during the acceleration pulse, or $\Delta V/V$, must be low ($<1\%$).

Operating Principles of the Induction Accelerator

An individual induction cell can be understood as a simple application of Faraday's Law, which states that a voltage is generated around a loop that encloses a time-varying magnetic flux. Figure 1 shows a series of three ferrite cores. Each core is encircled by a circuit that induces a time-varying magnetic flux. The induction module can be represented as an autotransformer, where the ratio of

primary or input voltage to secondary or induced voltage is 1:1. The primary circuit consists of an external power source that supplies a voltage pulse to a circuit that encircles each ferrite core. The voltage induced across the open-circuit terminals of the secondary circuit (see AC in Fig. 1) is equal to that in the primary circuit (see AB in Fig. 1). These terminals comprise an acceleration gap. When an electron beam, which moves from left to right in Fig. 1, passes through gap AC, each electron acquires an increment of energy (voltage).

In operation, the high-voltage pulse energizing the accelerator module is produced in a power-conditioning system. This system converts the 60-Hz continuous power source into the desired short-pulse format required by the accelerator. The power-conditioning system shown in Fig. 2 consists of a power supply, a command resonant charging circuit, an intermediate energy store with switch, and a pulse compressor (the MAG-I-D, characterized by saturable magnetic switches), which drives the accelerator module.

Fig. 1

An induction cell operates according to Faraday's Law. Each ferrite core is encircled by a circuit that induces a time-dependent magnetic flux. The same voltage as that in the primary voltage (see gap AB) is induced in the open-circuit terminals of the secondary voltage (see gap AC). These terminals comprise an acceleration gap so that when an electron beam passes through gap AC, each electron acquires an increment of energy.

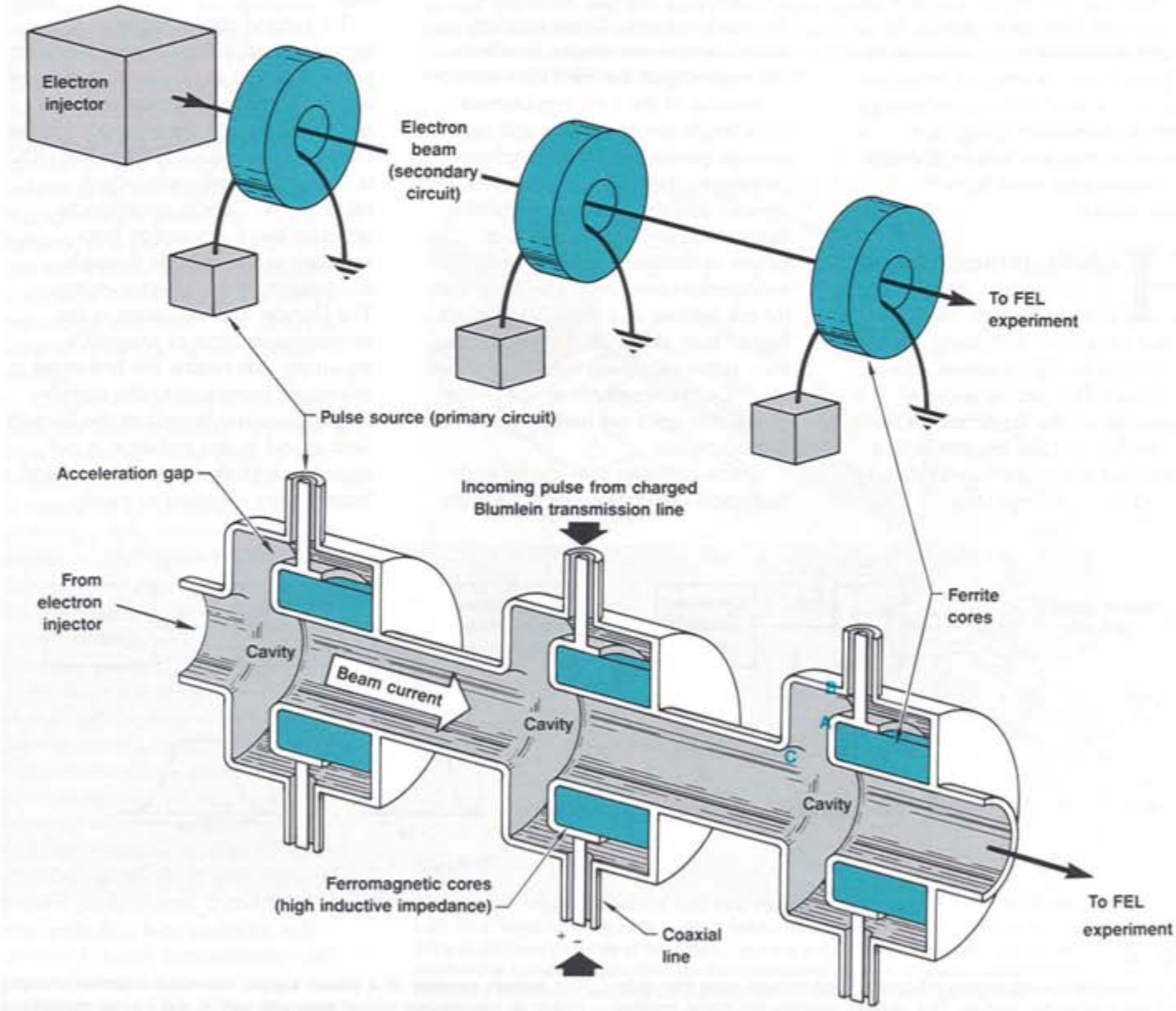

The peak power generated by the power-conditioning system is 10 GW, and the energy per pulse is 625 J. Because such a pulse must be repeated at high frequencies (many kilohertz), we selected the magnetic pulse-compression scheme to allow for operation at the necessary high repetition rates. The average power of the system is equal to the pulse energy times the pulse frequency and corresponds to many megawatts at kilohertz frequencies. It is imperative, therefore, that the compression scheme be highly efficient so that little energy is wasted.

The amount of pulse compression is chosen so that the switch in the intermediate store can achieve both the peak power levels and repetition rates with state-of-the-art technology. Command resonant charging is required to regulate and to decouple the intermediate store from the dc power source.

High-Brightness Injector

An accelerated electron beam must have high brightness for our accelerator technology to be appropriate for FEL systems. More specifically, FEL gain is strongly dependent on the brightness of the electron beam. (The brightness is a measure of the beam current density divided by its divergence.)

Electron beam emittance is a measure of random, transverse motion of electrons. Brightness is proportional to the inverse square of emittance. If the electrons were to have excessive random, transverse motion, they would not be synchronous with the electromagnetic wave of the laser pulse. Thus, the beam's transverse motion must be tightly constrained. (See the article on p. 8 for a description of this physics requirement in the FEL.) Similarly, bulk transverse wiggling motion, or sideways displacement, of the electron beam would decouple the forward-moving photons from various portions of the electron beam. Either random or bulk transverse motion results in diminished gain for the FEL system.

Because of the new requirements for a bright electron beam and high average power, we have completely redesigned the source of electrons, the injector, and the accelerator. Existing field-emission cathodes produce beams of sufficient brightness for near-term experiments. However, they do not operate at a duty factor much higher than about 10^{-6}, whereas the duty factor of current interest is about 10^{-4}. Our experiments on the design of electron guns are based on two cathode types.

Oxide cathodes provide for high extraction densities (>40 A/cm^2) but tend to yield an electron beam that is less bright (<3 to 5×10^5 A/cm^2·sr) than is produced by other cathodes. This result is most likely due to a variation in the potential across the emitting surface caused by variations in coating thickness and conductivity.

Dispenser cathodes possess a constant-potential, high-conductivity surface but are more expensive and provide lower useful extraction densities (<10 A/cm^2) than other cathodes. On the other hand, our experiments on dispenser cathodes have yielded the best brightness ($>10^6$ A/cm^2·sr) we have obtained to date.

We expend considerable computational effort on each electrode package before deploying it at our test stand. The computer code we use most in designing the electrodes is the Darwin particle code (DPC). The DPC is a particle-in-cell code, which employs the Darwin equations to simulate beam generation from emission at the cathode through acceleration to full injector energy. The Darwin approximation is the magnetostatic limit of Maxwell's equations that retains the first-order relativistic correction to the particle Lagrangian. The benefit of the Darwin field model is that radiation is not included, and, therefore, nonphysical beam-source coupling to purely

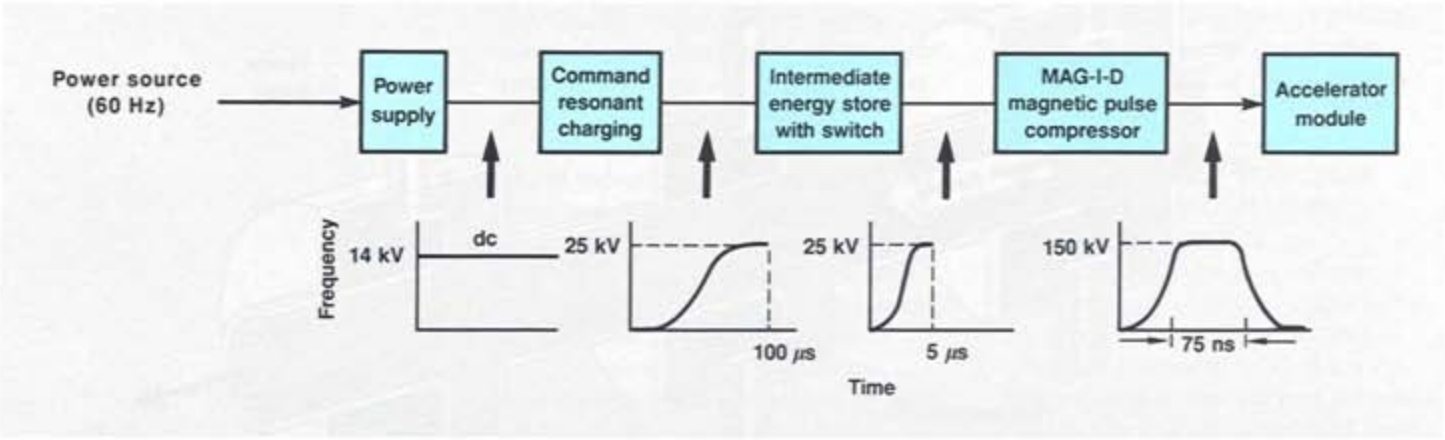

Fig. 2

The power-conditioning system produces a high-voltage pulse that energizes the accelerator module. This system converts the 60-Hz continuous-power source into the short-pulse format required by the accelerator. The system consists of a power supply, command resonant charging circuit, an intermediate energy store with switch, and a pulse compressor MAG-I-D that drives the accelerator module.

electromagnetic modes is avoided. Furthermore, the Darwin model permits larger time steps than fully electromagnetic codes may use. In addition, we make every effort to maintain extraction uniformity at the cathode surface and to maintain achromaticity while minimizing geometrical aberrations and providing a good match to solenoidal transport.

Our experimental program is carried out in the Accelerator Research Center (ARC) at the Laboratory. The ARC contains a 1-MeV injector (see Fig. 3) and two accelerating sections, each providing an additional megavolt. The units are located in two radiation-shielding ponds, one housing the injector and the other housing the two 10-cell accelerating sections. The 1-MeV injector is built along the same lines as the accelerator. The anode side consists of four induction cells with solenoids on the inside for beam transport, each producing 125 kV. The cathode side uses the same acceleration cell but without internal solenoids. The collimator shown in Fig. 4 is used for measuring emittance. This device is located at the end of the accelerator section.

Guided by detailed calculations with the injector-design DPC, we have produced triode designs with brightnesses of 1.3×10^6 A/cm^2·sr for a current of 1 kA. We are now building a new injector with 2-kA capability and higher brightness. Because of gradient limits on injector surfaces, we can obtain higher currents by increasing the cathode diameter from 3.5 in. to 6 in.

We have tested dispenser cathodes in the high-brightness injector at repetition rates approaching 2 kHz without discernible degradation in performance. Lifetimes of several hundred hours are typical with cathode operation at 1050°C. Better vacuum conditions should improve present performance. In addition, we anticipate that new cathodes will operate at lower temperatures with increased lifetimes.

The performance of our present injectors exceeds that needed for FEL

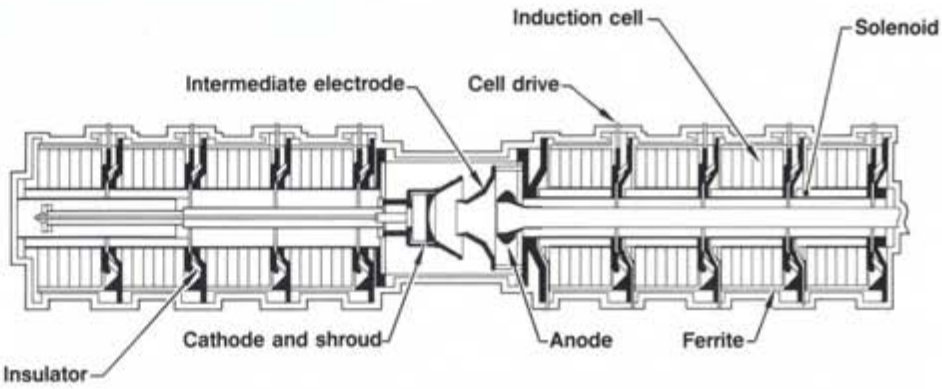

Fig. 3

Experiments on beam brightness are carried out on the 1-MeV injector, shown here in cross section. The anode (the right-hand portion of the injector) consists of four low-gamma induction cells with solenoids on the inside for beam transport, each producing 125 kV. The cathode (at left) uses the same acceleration cell, but without the internal solenoids. For this injector, the output current is 1 kA, and the output energy is 0.8 MeV.

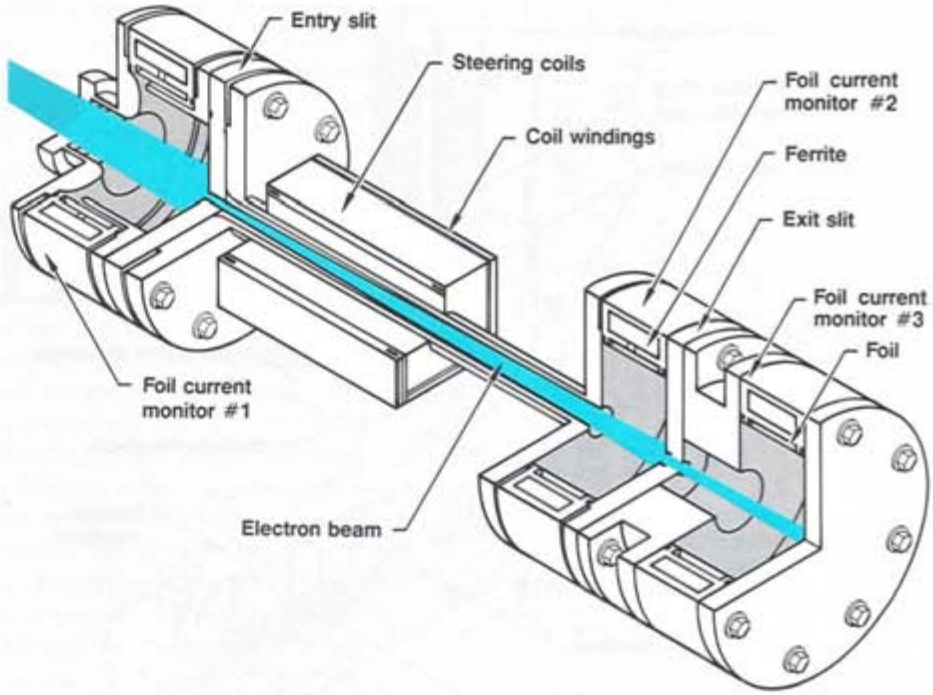

Fig. 4

We measure brightness with a field-free collimator. Entry and exit slits determine the effective pipe size, while steering coils located before the entry slit and between the two slits allow sampling of different sections of the beam. Once the proper initial conditions are satisfied, a measurement of the current passing through the collimator yields the brightness information. Our efforts to maximize brightness involved optimizing both the electron optics and the cathode. The cathode is of primary importance because beam brightness cannot be better than exists at the source. Electron optics determine how well this brightness is preserved as the electrons are accelerated.

amplifiers of microwave radiation. Indeed, the performance is now sufficient to allow for high-gain, high-extraction experiments in the near-infrared range. Because the observed brightnesses are at least one order of magnitude lower than the intrinsic cathode brightness, we expect further improvements in injector performance.

Design of the Induction Cell

The induction cell just described forms the fundamental building block of an induction linear accelerator. Ten of these cells are bolted together (see Fig. 5) to form an induction module that conveniently matches the drive energy from the nonlinear magnetic pulse generator. One MAG-I-D generator drives two 10-cell modules by means of two 4-Ω cables. The two 10-cell modules are designed to accelerate a 3-kA electron beam to between 2.5 and 3 MeV of energy.

In practice, the accelerator cell design is complex; requirements for solenoidal focusing, extraction of waste heat, and addition of waveform compensation dictate an accelerator structure represented by the 10-cell block shown in Fig. 5. The actual geometry of the cells depends on the type of focusing that is used. For a beam energy of less than 25 MeV, solenoid magnets yield the strongest focusing. At higher energy, quadrupole magnets provide stronger focusing. Because quadrupoles are too large to fit within the cells, they must be deployed between cells.

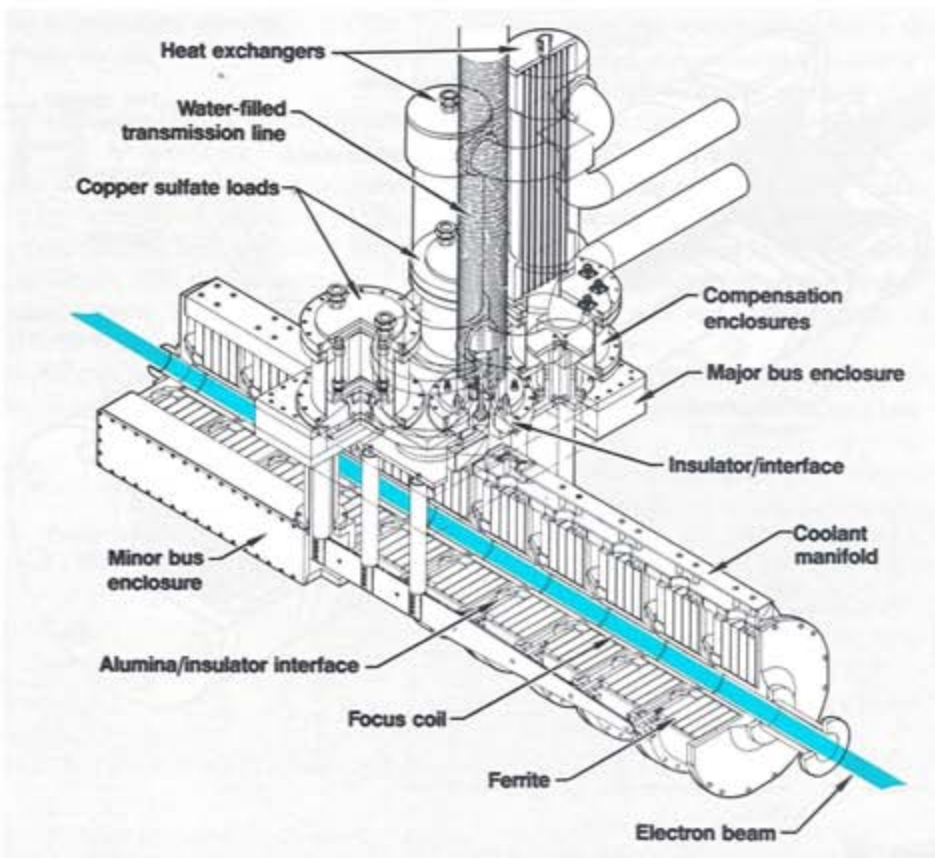

Fig. 5

Ten induction cells form an induction module that is driven by the nonlinear magnetic pulse generator. One generator (MAG-I-D) drives two 10-cell modules, which are designed to accelerate a 3-kA electron beam to between 2.5 and 3 MeV of energy. The actual geometry of these cells depends on the type of focusing that is used.

The induction linear accelerator is not resonant and, therefore, does not store energy. For efficient operation, we must adjust the electron-beam current at a given accelerator-cell voltage to match the impedance of the drive lines. Energy that is not coupled into the electron beam cannot be stored and must be dissipated as waste heat. This problem places a constraint on the minimum current that can be efficiently accelerated at a given accelerator-cell voltage.

A second constraint on accelerator design results from the direct-current nature of the accelerating pulse. The duration of this pulse must be shorter than the time to saturate the ferrite accelerator cores. This time is dictated by

$$\int_0^{\tau} V \cdot dt \leq A \cdot \Delta B_s ,$$

where τ is the pulse length, V is the accelerating potential, A is the core cross-sectional area around which the potential appears, and ΔB_s the available flux swing in the ferrimagnetic or ferromagnetic core.

The geometry of an accelerator cell is further constrained by core losses and beam instabilities. The growth rate of the beam-breakup instability depends exponentially on the ratio of acceleration gap to the inverse square of the diameter of the vacuum pipe containing the electron beam. The diameter of the beam pipe must be as large as practicable if the electron beam is to be of sufficient quality when it exits the accelerator. We have determined that a diameter of about 15 cm is optimal for our present application. In the low-energy cells (energy <25 MeV) at the front end of an accelerator, sufficient space must be allowed to accommodate the focusing solenoid. These conditions set a minimum value for the inner diameter of the core.

Core current losses, which appear as a leakage current that increases with time, also impact the cell design. The losses determine the rate at which the voltage decays during a pulse.

While compensation is possible, current loss due to leakage induction must be small compared to the electron-beam current, or the stringent restrictions on the beam energy spread, $\Delta\gamma/\gamma$, cannot be met. The leakage current is an almost linear function of the core material outer diameter and thereby constrains its value.

In summary:

- The core cross-sectional area $(R_o - R_i)\Delta z$ for a given accelerating potential V_{acc} is set by the volt-second requirement.
- The core inner radius R_i is set by the beam-breakup instability.
- The core outer radius R_o is limited by the allowed leakage current and core losses.

The above three conditions determine the range of values of the accelerator gradient $V_{acc}/\Delta z$, where z is distance along the electron beam. Thus, setting the current and pulse length also sets bounds on all the geometric constants for an accelerator cell design.

Drive System for Induction Cells

The final consideration in the design of the accelerator as an FEL driver is the requirement of high average power. The spark-gap technology developed for the Laboratory's Advanced Test Accelerator (ATA) is not compatible with FEL requirements that demand multikilohertz repetition rates. ATA is a 50-MeV accelerator that was designed for the CPB program and is currently being used for infrared FEL experiments. The required high average power led to development of a nonlinear magnetic pulse compressor. This development required several years of effort and has resulted in a rugged, reliable device that is capable of satisfying FEL needs.

For the most recent generation of accelerator, the pulsed-power drive is produced by a nonlinear magnetic pulse compressor, the MAG-I-D. This three-stage compressor (see Fig. 6) is totally passive. It relies only on the change in permeability of ferromagnetic materials as they saturate to provide a 100-fold pulse compression with over 90% energy efficiency.

We selected an input charge time of 5 μs so that the power requirements at the input to the chain remain within the performance limits of available thyratons. The output pulse length is determined by the properties of the ferromagnetic core material. An amorphous mixture of metal and glass is used for the ferromagnetic core material throughout the MAG-I-D.

The basic difference between the MAG-I-D and previous magnetic pulse compressors is the addition of the precompression stage shown at the top of Fig. 6. This stage greatly reduces the demands on the thyratron in the chassis of the intermediate energy-storage switch. We are now testing several parallel thyratrons to satisfy our ultimate goal of switching 625 J at 5 kHz for 30 s. To date, we have achieved a value of 2.5 kHz.

Experimental Test Accelerator II

Our advances in accelerator technology have satisfied the near-term applications of an FEL device and are being incorporated into a new Experimental Test Accelerator, ETA II. This device will feature the injector, accelerator cells, magnetic-pulse compression, and high-average-power intermediate energy storage achieved by prototypes in the ARC. ETA II will be housed in the existing shielded enclosure of the present ETA after a few modifications are made. Figure 7 shows a layout of the facility. The accelerator and all its components are now being fabricated, and operation is expected by September 1987. The design parameters are for 3 kA of beam current and 8 MeV of output energy with a 50-ns pulse. The device will initially operate with the existing 1-kA, 1-MeV injector while a higher-current, higher-energy injector is being developed.

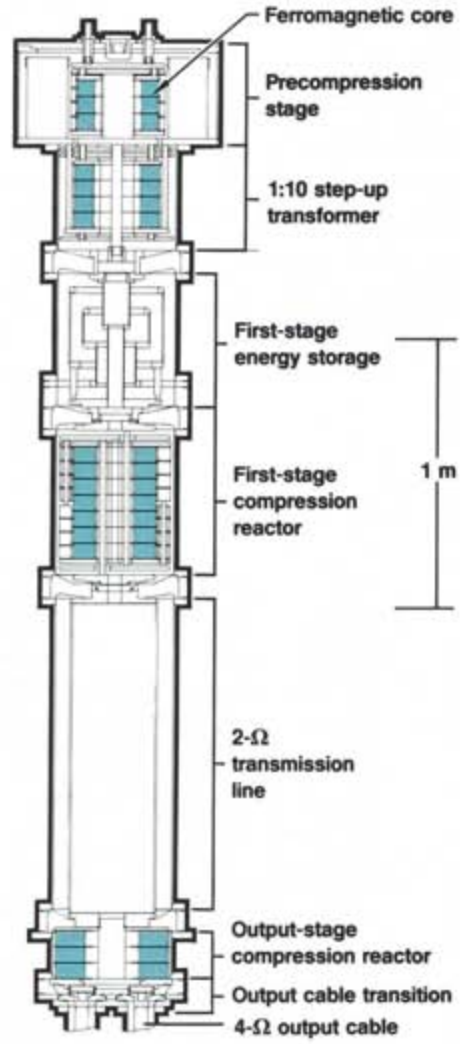

Fig. 6

This cross section of the MAG-I-D nonlinear magnetic pulse compressor shows the ferromagnetic core material, which largely determines the output pulse length. The basic difference between the MAG-I-D and our previous magnetic pulse compressors is the addition of the precompression stage, shown at the top, that greatly reduces the demands on the thyratron in the chassis of the intermediate energy-storage switch.

During our new experimental program, we will study such physics issues as suppression of the beam-breakup instability and generation and transport of bright beams. ETA II will also serve as a test bed for the engineering issues of high-average-power component reliability, energy variation during the pulse, higher gradients, precision alignment, and advanced solenoids. Finally, ETA II will provide a bright electron beam for testing advanced wiggler concepts and the generation of very-high-power millimetre microwaves.

Conclusions

We are making technological advances in the design of three subsystems of the induction linear accelerator that will be used to drive optical-wavelength, high-power FEL amplifiers. The subsystems, which are largely derived from validated hardware, are the high-brightness injector, the newly designed induction cells, and the MAG-I-D drive system with its associated pulse-power drive system. Prototype tests are demonstrating the high reliability of components in multikilohertz, high-average-power applications. Operation of our new accelerator, ETA II, is projected for September 1987. ETA II will incorporate all of our recent technological advances.

Key Words: Accelerator Research Center (ARC); Advanced Test Accelerator (ATA); Darwin particle code (DPC)—injector design computer code; Experimental Test Accelerator (ETA); free-electron laser (FEL); induction linear accelerator; MAG-I-D driver.

Fig. 7
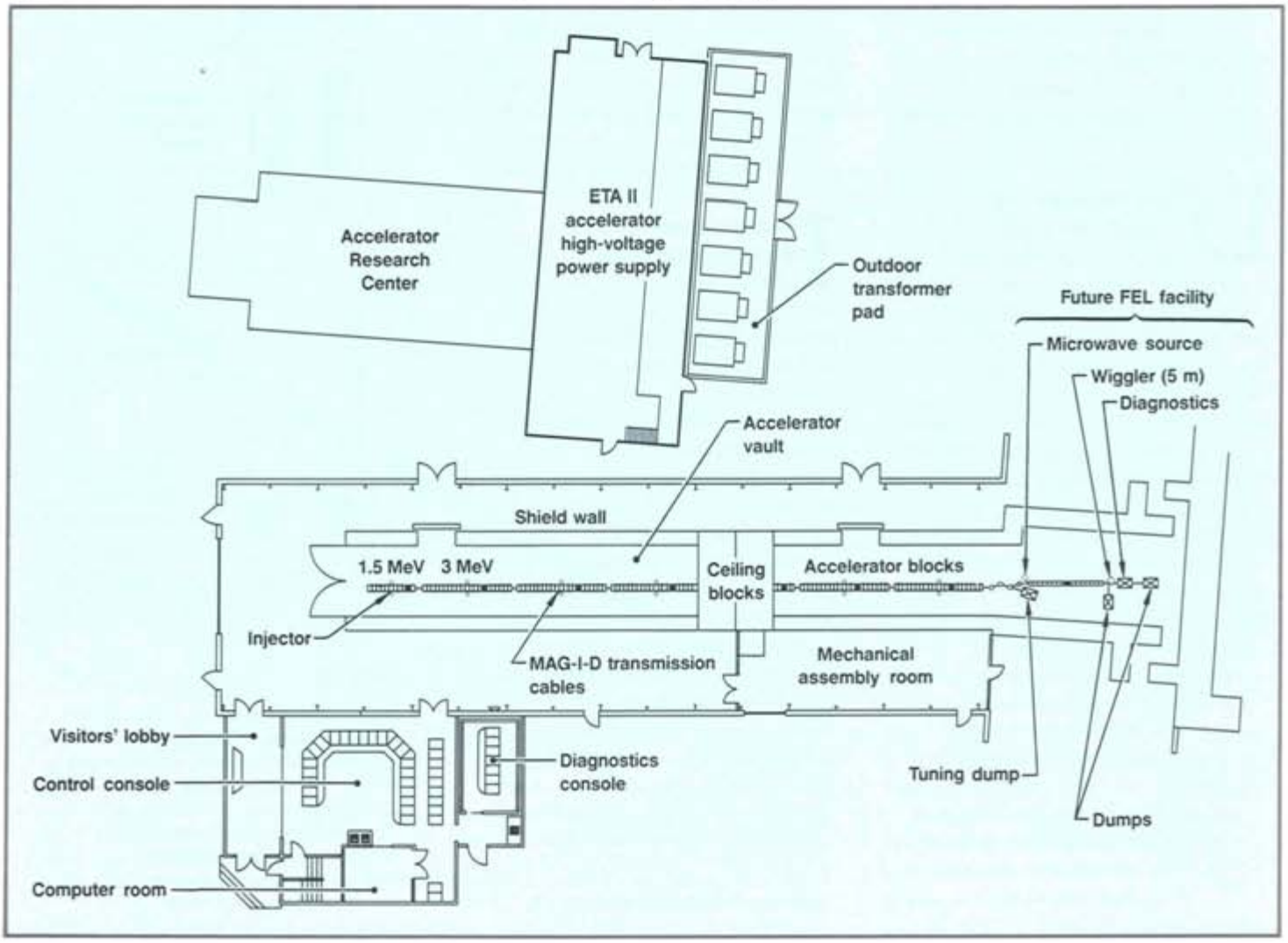
Our new ETA II facility will incorporate an injector driven by one MAG-I-D and six 10-cell modules driven by three MAG-I-Ds. Design parameters are for 3 kA of beam current and 8 MeV of output energy with a 50-ns pulse. Construction of a new control center that will use the advanced version of the system currently operating on the ATA is now under way. Initial operation of ETA II is projected for September 1987.