Energy and Technology Review

Lawrence Livermore Laboratory

December 1978

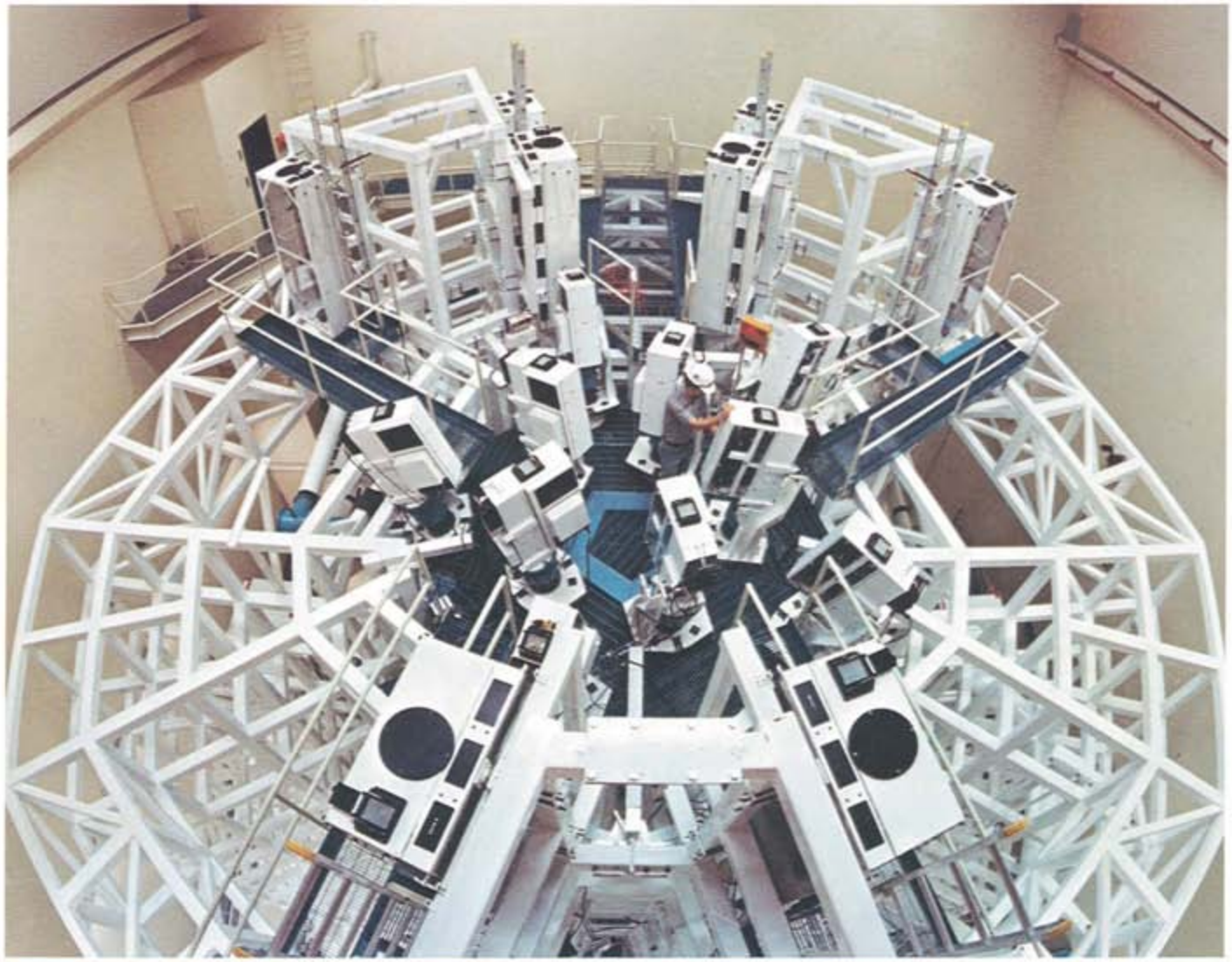

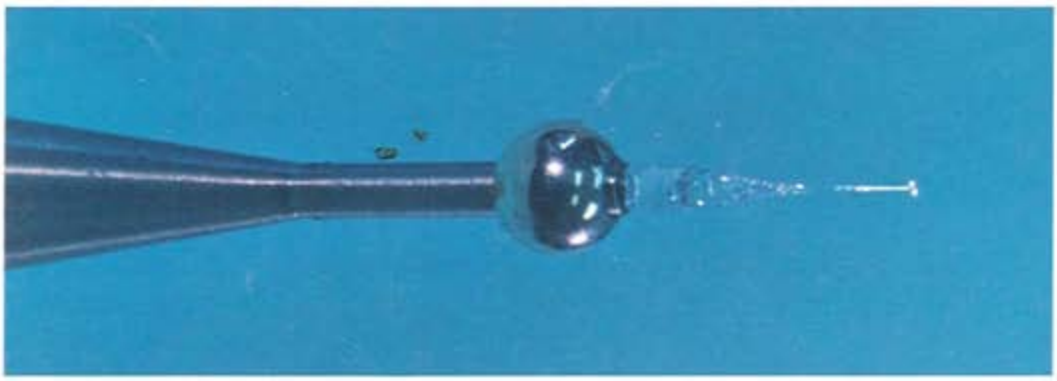

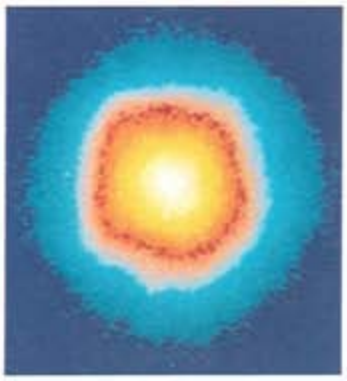

Alignment of the Twenty-Beam Shiva Laser

The Shiva laser facility comprises 20 separate lasers, which must deliver their output pulses to a microscopic fusion target at the same instant. This implies an unprecedented alignment and synchronization capability. Our alignment systems, built largely by private industry in response to our requirements, assure optimized irradiation of each fusion target while avoiding operating conditions that could damage the optical components. Most of the alignment tasks are performed by automatic systems. Those manual systems that remain are designed for eventual conversion to automatic operation. With these systems we can direct Shiva's 20 beams onto laser fusion targets with positional accuracy of a few micrometres and simultaneity of a few picoseconds.

The Shiva laser at LLL[1] is playing an important role in the quest for power from controlled thermonuclear reactions. This 20-beam, neodymium–glass system produces 1-ns light pulses of 10 to 20 kJ, or shorter pulses with a peak power of 20 to 30 TW. We expect to achieve significant thermonuclear burn from laser fusion targets with this system.

In 1974 it became apparent, from experience with smaller systems and from early high-energy laser facility studies, that the 10-kJ laser being designed would require automated alignment capability. Accordingly, LLL funded conceptual design studies of alignment systems at Aerojet Electrosystems Company, Hughes Aircraft Company, and Perkin–Elmer Corporation. These studies played a key role in identifying workable alignment techniques for Shiva and led to subsequent prototype and production contracts at Aerojet and Hughes.

THE ALIGNMENT PROBLEM

Figure 1 shows the paths along which light travels in Shiva from the pulsed oscillator to the target. From such a view of the system, one can better understand Shiva as an alignment task as distinguished from such other major areas of effort as power conditioning or optical-mechanical fabrication. Stated in a general way, the pulsed oscillator output must be directed through the components on the oscillator–preamp tables, divided into 20 beam lines by an array of beam splitters and mirrors, and pointed down each of the 20 amplifier chains, each containing 19 fixed-aperture components including spatial filters. The amplified pulses must then be recombined on the surface of a single tiny target, and so synchronized that the light from all paths arrives at the target simultaneously.

Basic to the Shiva alignment-system design were two key decisions: to provide a very stable mounting structure (a "space frame") for the optical components in a carefully controlled environment to eliminate rapid changes in alignment, and to divide the large number of alignment tasks into groups that could be performed by the separate sub-

Contact Erlan S. Bliss (422-5483) for further information on this article.

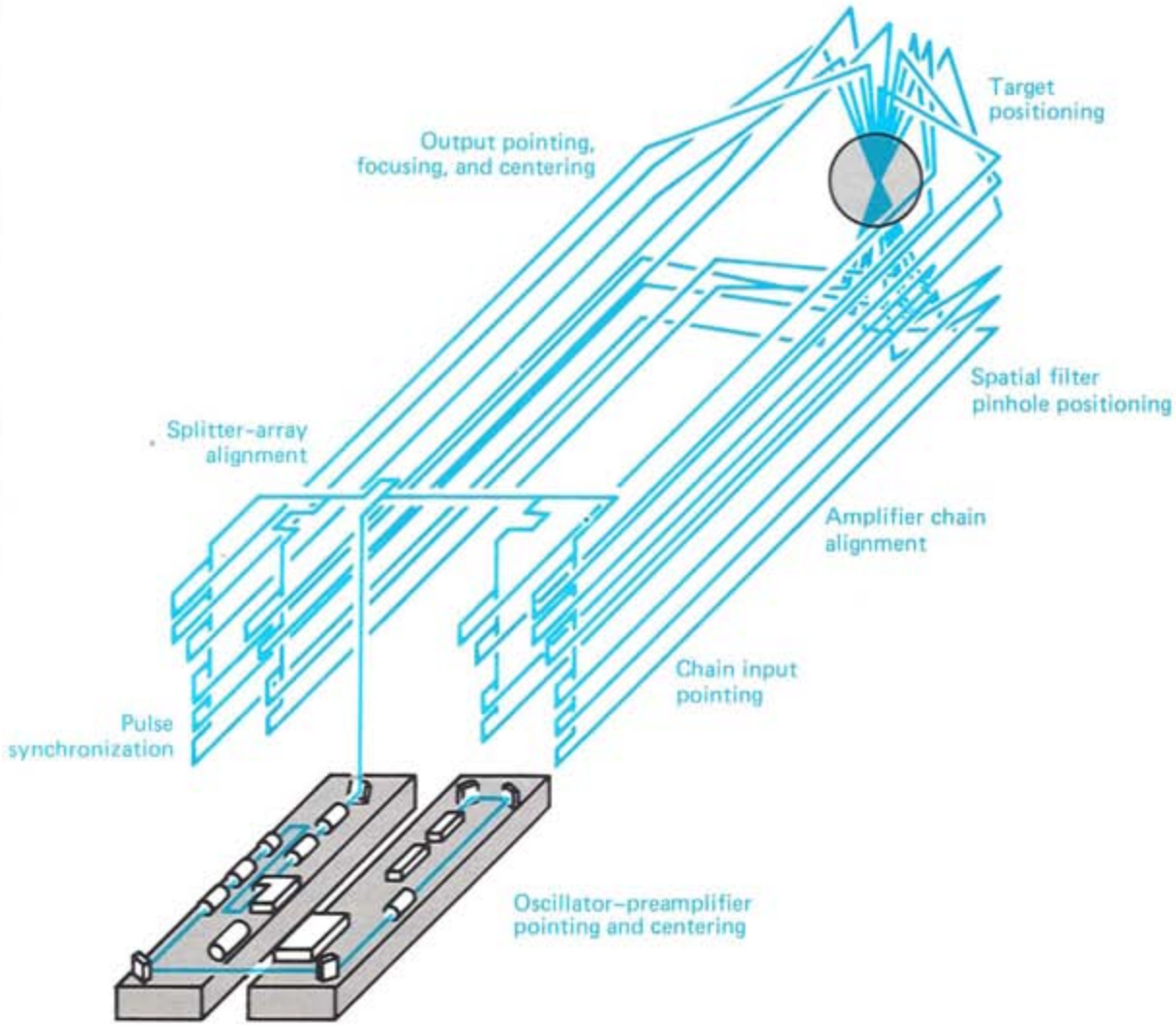

Fig. 1. Paths followed by laser light between the oscillator and the target in the Shiva experimental laser fusion system. The beam leaving the preamplifier table rises vertically about 5.5 m before it is split into two horizontal beams, each of which is split again, giving four beams propagating back toward the front of the system. After being turned downward, 2 of these beams are further split into 6 paths each, and 2 are split into 4 each, to make a total of 20 beams propagating the 50-m distance to the first turning mirror in the target room and subsequently to the target. The subsystem organization indicated by the labels was adopted to aid in defining design and performance goals and to facilitate phased installation of alignment capability.

systems identified in Fig. 1. During the planning and construction of Shiva, this subsystem organization provided a convenient way of defining separately achievable design and performance goals, and facilitated phased installation of alignment capability. Now, it is contributing to the reliability of overall system operation. Failures can usually be isolated in a single subsystem, permitting uninterrupted operation of the other systems.

OSCILLATOR-PREAMPLIFIER ALIGNMENT

Shiva has three oscillators. The pulsed oscillator provides a pulse of the desired duration and shape for a target shot. In preparation for a shot, a continuous wave (cw) oscillator provides light for

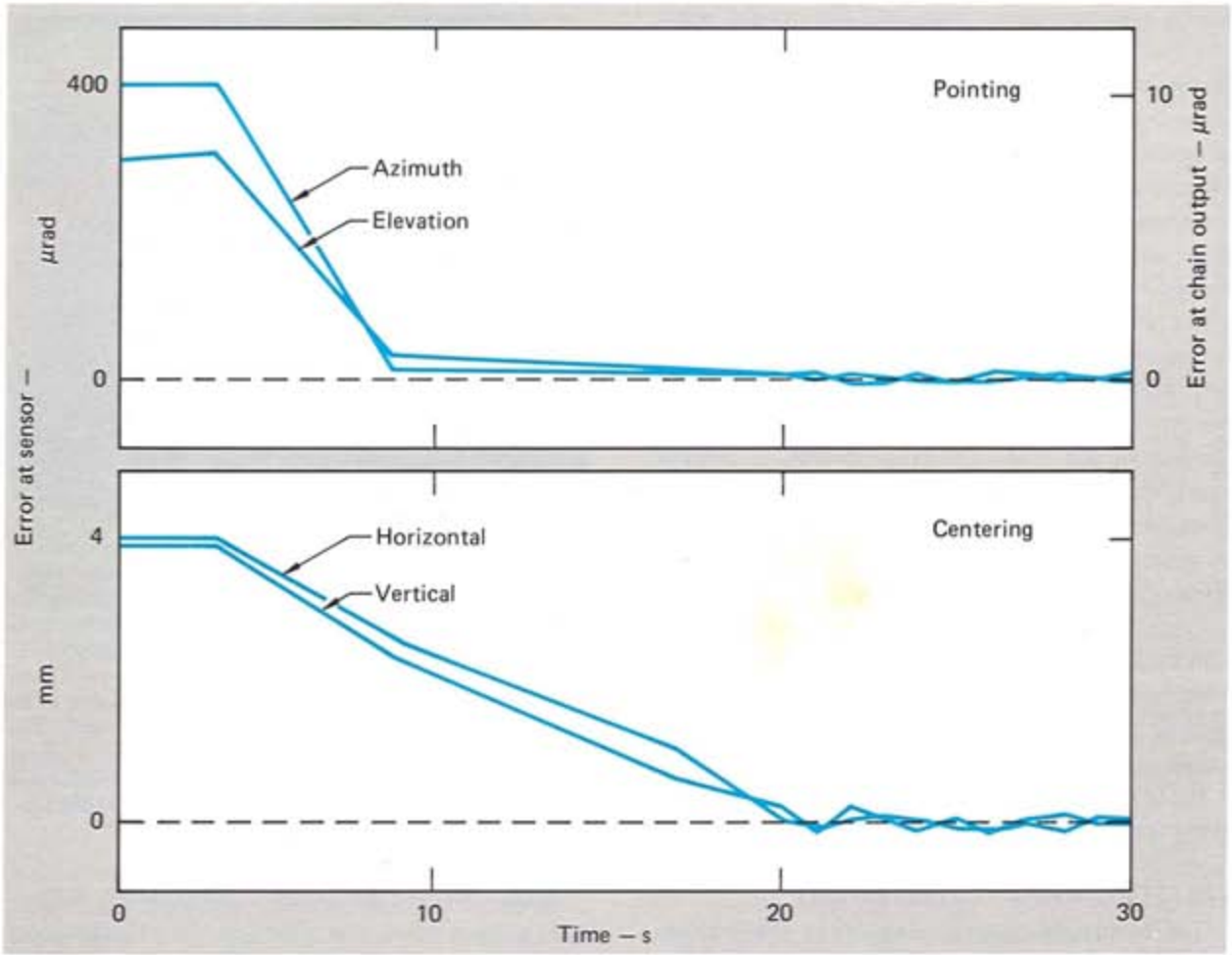

Fig. 2. Oscillator alignment system response to 400-μrad azimuth and elevation errors and 4-mm horizontal and vertical centering errors. The sensor measures all four errors simultaneously, and the system microprocessor calculates gimbal motions that will eliminate the errors. The speed of recovery from large errors is limited primarily by stepper-motor driving rates.

system alignment measurements, and a cw mode-locked oscillator provides a train of pulses for the pulse synchronization system.

A fundamental assumption of this multi-oscillator arrangement is that the light from each of the laser oscillators follows the same path through the rest of the laser. The oscillator alignment system ensures this by automatically pointing and centering all three oscillators with respect to the single sensor seen in the middle of the preamplifier table in Fig. 1.

The heart of the oscillator-alignment sensor is a pair of lateral-effect silicon photodiodes, one for centering and one for pointing, each of which has four outputs that indicate where the beam is striking the photodiode surface. A beam-splitter and lens arrangement samples the beam, projecting an image of the beam cross section onto the centering detector and bringing another beam sample to a focus on the pointing detector. Centering and pointing errors are therefore both manifested as displacements on their respective detectors. The oscillator-alignment sensor package is fastened securely to the preamplifier table inside one of the main bulkheads of the laser space frame, where it is well protected from accidental bumps and other disturbances.

The four signals from each of the two detectors are integrated and digitized in a rack-mounted unit below the sensor. From the digitized signals a

nearby microprocessor calculates the present position and direction of the pulse, compares them with the desired position and direction, and computes corrective commands to motor-driven gimbals that bring the beam back into alignment. Figure 2 shows the response of this automatic system to a 4-mm centering error and a 400-μrad pointing error. For large initial errors the system's response rate is limited by stepper-motor driving rates. For small errors the iteration time is less than 1 s.

The control architecture for Shiva alignment[2] is well illustrated by the oscillator-alignment subsystem. The local control station shown in Fig. 3 consists of the LSI-11 microprocessor, a control panel for operator interface and manual operation when desired, a floppy-disk drive for loading programs into the LSI-11, a keyboard terminal for printout and program modification capability, and a motor–driver chassis for converting LSI-11 motor commands into stepper-motor impulses. This and other local or "first level" control stations are capable of stand-alone operation, but they are also linked to a "second level" alignment minicomputer in the control room for coordinated operation of all subsystems from a central location.

Fig. 3. Local controls for the oscillator alignment system. A Digital Equipment Corporation LSI-11 microprocessor with a control panel tailored specifically for the beam switching and alignment tasks on the oscillator and preamplifier tables is the heart of this first-level control station, which is mounted in the space frame near the oscillator and preamp tables. Each alignment subsystem has similar local controls, all connected to the second-level alignment computer in the control room. This arrangement satisfies both the need for local access to control when a small part of the system is being worked on and the need for coordinated higher level control when the whole system is being operated.

SPLITTER-ARRAY ALIGNMENT

The beam-splitter array divides the single beam from the preamplifier table into 20 separate beams for input into the amplifier chains. It contains a large number of mirrors and beam splitters, each of which must be properly aligned.

To aid in monitoring the position of the beam in this part of the system, we are able to insert crosshairs in four sets of locations. The first crosshair position is just ahead of the mirror that turns the beam upward at the end of the preamplifier table. This crosshair is indexed to correspond to the center of the beam as aligned by the oscillator-alignment system. The second set consists of four crosshair positions just ahead of the four points where the beams turn down into the final beam splitters. The third set lies at the bottom of these vertical paths, and a final set of 20 crosshairs is indexed to the limiting apertures at the inputs to each of the 20 amplifier chains.

Each crosshair generates a pronounced diffraction pattern when it is placed in the coherent laser beam. Alignment through the splitter array is correct when the diffraction patterns from all the crosshairs are centered on each other.

The mounts in the splitter array require only infrequent adjustment as long as other activity in the area is minimized. This makes it possible for us to monitor this part of the system with hand-held viewers. However, we have provided for future installation of sensors for automatic splitter-array alignment.

CHAIN INPUT POINTING

At the input to each amplifier chain the beam passes through a limiting aperture before entering a succession of amplifiers, Pockels cells, Faraday rotators, and vacuum spatial filters. To ensure that it enters the chain correctly, a fraction of each beam is split off into a pointing sensor mounted on a shelf

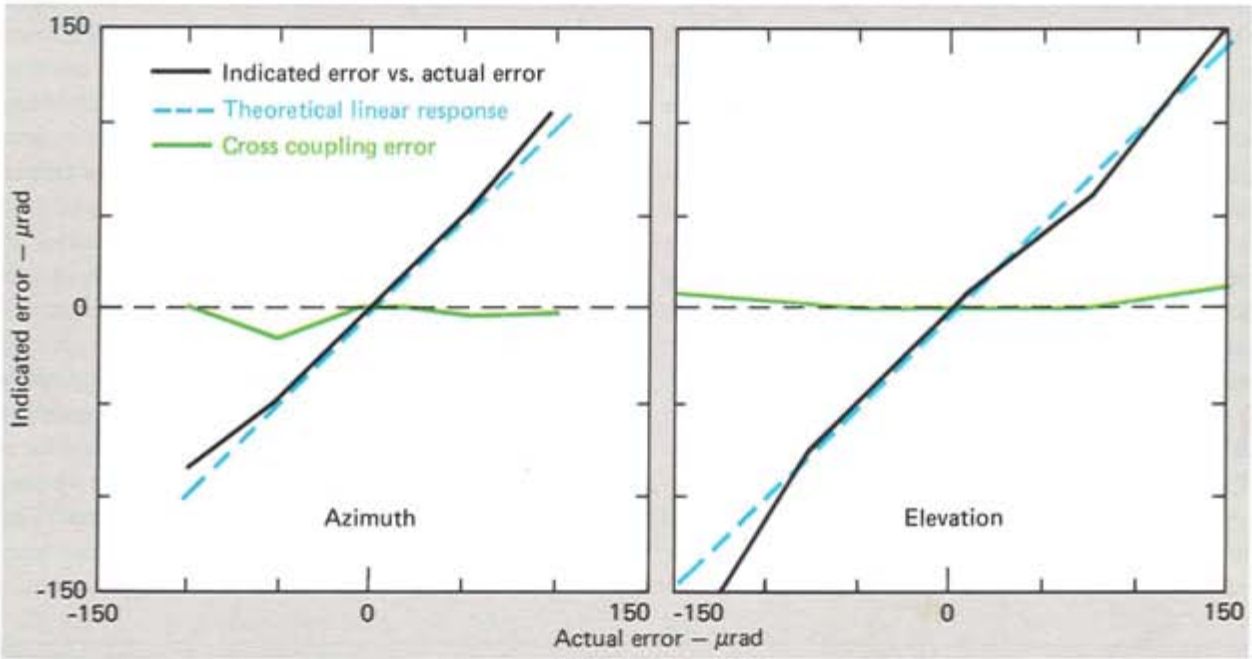

Fig. 4. Response characteristics of an Aerojet Electrosystems chain-input pointing sensor. With the control loop open, the Aerotech chain-input pointing gimbal was driven through ±100 μrad in azimuth and ±150 μrad in elevation. The pointing errors received by the microprocessor from the sensor are plotted as solid black lines. Some elevation error was indicated when the azimuth motor was driven and vice versa (cross-coupling shown by green lines). Neither the slightly nonlinear response nor the observed cross-coupling is serious enough to interfere with closed-loop operation.

bolted directly to the space frame. Aerojet Electrosystems built the 20 sensors after successfully completing a design and prototype contract. A single microprocessor receives the error signals from all 20 sensors and calculates corrective commands for the motor-driven gimbals at the input end of the amplifier chains.

Figure 4 is an example of the linearity and cross-coupling characteristics obtained in the chain-input pointing sensors. The solid lines show the indicated error as a function of the actual error on both the azimuth and elevation axes. The closed-loop control program assumes a linear response as indicated by the dotted lines. The dashed lines show the error indicated on the axis orthogonal to the one on which error has actually been introduced. Although indications of both nonlinearity and cross-coupling are seen in this data, neither of these effects is serious enough to significantly degrade the closed-loop control of the system. Residual alignment errors of 15 μrad or less are routinely achieved at the input to each chain.

AMPLIFIER CHAIN ALIGNMENT

Pointing the beams reproducibly at the input to each beam line does not in itself guarantee that a perfect beam profile will appear at the chain output in exactly the correct position or propagating in exactly the correct direction. Small positioning errors of chain components can cause the beam to be clipped, offset, or, in the case of spatial filter lenses, repointed. To monitor the alignment state of the chain, we remotely insert crosshairs at each end. The input-end crosshair is indexed to the limiting aperture as before, and the output crosshair's position coincides with the center of the first of two output turning mirrors. A chain's components are correctly positioned only if the centers of both crosshair diffraction patterns coincide and the periphery of the beam is defined entirely by the input limiting aperture, not by any of the numerous component apertures along the chain.

Each of the 20 pointing, focusing, and centering (PFC) sensors described below provides us with a closed-circuit television image of one of the beams. The operator examines the display to verify the alignment. We correct small offsets of one crosshair pattern with respect to the other by moving the input limiting aperture. To eliminate aperturing within the chain, we must locate the offending component and move it or redirect the beam by a small motion of a spatial filter lens. In practice, we seldom need to make such adjustments because the support structure is inherently so stable.

SPATIAL-FILTER-PINHOLE POSITIONING

There are presently 102 spatial filters in Shiva, 5 in each of the 20 amplifier chains and 2 on the preamplifier table. Each spatial filter contains a small diamond pinhole for removing intensity variations from the beam. Such variations (lighter or darker areas in the beam) are primarily the result of optical imperfections and self-focusing effects. They consist of light moving at small angles with respect to the rest of the beam. The input lens of a spatial filter focuses the main beam (all parallel light) to a tiny spot that can pass through a correctly positioned pinhole without being clipped on the edges. The nonparallel light hits the edges of the pinhole and stops.

Figure 5 illustrates the back-illumination pinhole alignment technique in use on Shiva. For each chain an optical system looking through the second turning mirror in the target room images the spatial-filter focal plane onto a television camera. This camera is one of several major components contained in the chain's "incident beam diagnostics

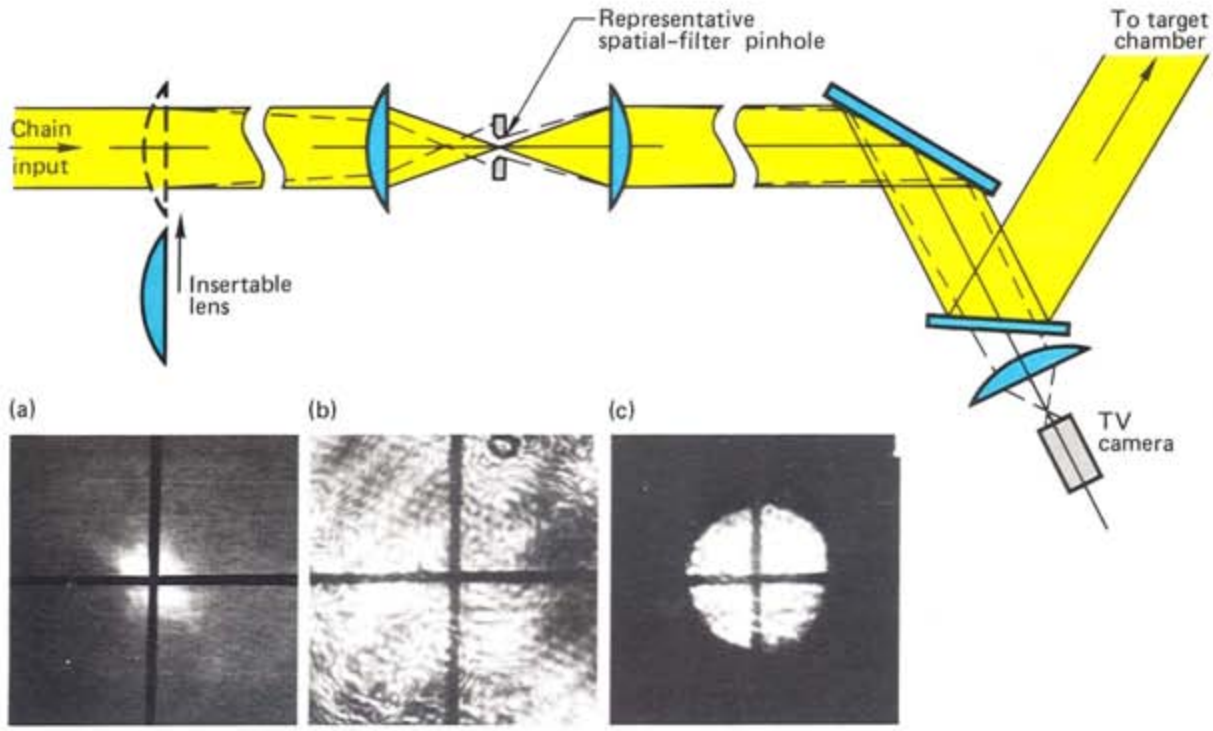

Fig. 5. Television images obtained at different steps in the back-illumination technique for spatial-filter pinhole alignment. These displays are viewed by operators in the control room, who remotely position the 100 pinholes in the system by sending stepper-motor commands to the Ultek pinhole-manipulators. (a) An image of the focused beam centered on a cross hair in front of the TV camera. (b) Inserting a weak positive lens at the input of the amplifier chain brings the beam to a focus slightly ahead of where the pinhole should be in each spatial filter. Beyond the focus the beam expands to fill the screen. (c) The pinhole, reinserted, clips off the outer portions of the image. The pinhole may then be centered on the cross hairs.

sensor," so named because for pulsed shots it is used to characterize thoroughly the laser pulse incident on the target. The image of the focused beam is centered on a reference crosshair as in Fig. 5a. A remotely insertable lens is then placed in the beam near the chain input. The power of the lens is chosen such that the angle imparted to the beam's outer rays causes them to focus ahead of the pinhole and then expand to a spot larger than the pinhole in the nominal focal plane of the filter. Figure 5b is a television display of this large illumination field with the pinhole removed.

The pinhole is mounted on a three-axis motor-driven manipulator, and when it is brought into the vicinity of the focal plane, its silhouette can be seen on the TV monitor as in Fig. 5c. Accurate transverse position is then obtained by centering the pinhole image on the crosshair, while proper position along the propagation axis corresponds to sharpest focus of the pinhole image.

These pinhole alignment steps are currently performed by system operators from the alignment console in the control room. However, equipment has been purchased to digitize video data from the television network and make it available to the alignment system computers. Pinhole alignment will become an automatic closed-loop function when we have completed the software development.

OUTPUT POINTING, FOCUSING, AND CENTERING

The 20 beams emerging from the laser pass through ports in the wall of the laser bay and enter the target room where large turning mirrors direct 10 of them to the top of the target chamber and 10 to the bottom. Each beam must be centered on its target-chamber focusing lens and pointed and focused on the target. This is accomplished by the pointing, focusing, and centering (PFC) system. For each 20-cm-diam beam, this system consists of a PFC sensor, two motor-driven mirror gimbals, and a three-axis motor-driven positioner that holds both the focusing lens and a retro-reflecting "centering screen."

All of these components, along with the target chamber and related hardware, are mounted on the steel space frame in the seven-story-tall target room. A view from the top of the room is shown on the cover of this issue, and Fig. 6 shows the arrangement of alignment components on the space frame for a representative beam. Aerojet Electrosystems designed the second gimbal and the PFC sensor to implement the output alignment approach proposed in their earlier conceptual design study. They also built the sensors.

Centering on the Focus Lens. To center each beam on its focusing lens, we must determine the position of the beam relative to the lens. For this purpose we insert (with a linear motor) a retro-reflector array indexed to each lens. When a centering screen is in place, the light that would have entered the focusing lens is reflected back toward the output pointing gimbal. A fraction of this light is transmitted by the second turning mirror and collected in the PFC sensor.

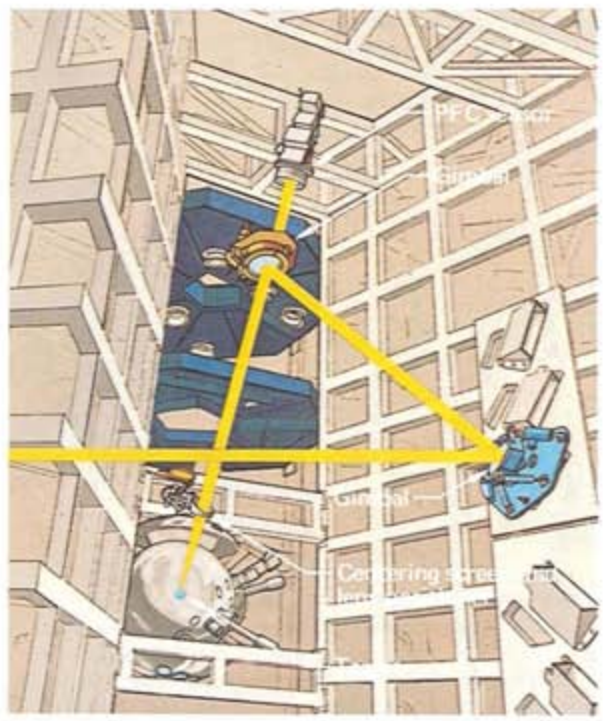

Fig. 6. The output alignment components for a representative beam, as seen from the side and about one-third of the way up on the seven-story-tall steel space frame in the target room. The pointing, focusing, and centering (PFC) sensor, large gimbals, and supporting hardware are used to position the output beam accurately on the target.

The principal components of a PFC sensor and its attached reflected-beam-diagnostics (RBD) package appear in Fig. 7. During beam centering operations, the PFC's insertable mirrors are retracted, and the optics in the PFC sensor simultaneously image the plane of the centering screen onto a position-sensitive detector and a silicon vidicon. Since the sensor has been previously aligned to look directly at the center of the focusing lens, any offset of the beam on the centering screen generates an error signal. From this signal, the PFC microprocessor calculates the appropriate motor commands for the two gimbals to remove the centering error without changing pointing.

Because the chain output has been previously centered on the crosshair at the first turning-mirror location, the operator can also visually verify centering on the lens by inserting the crosshair to see that its diffraction pattern is centered on the centering screen in his TV display. The lens turret gives him a choice of magnifications for obtaining a clear view of the diffraction pattern. A centering error of

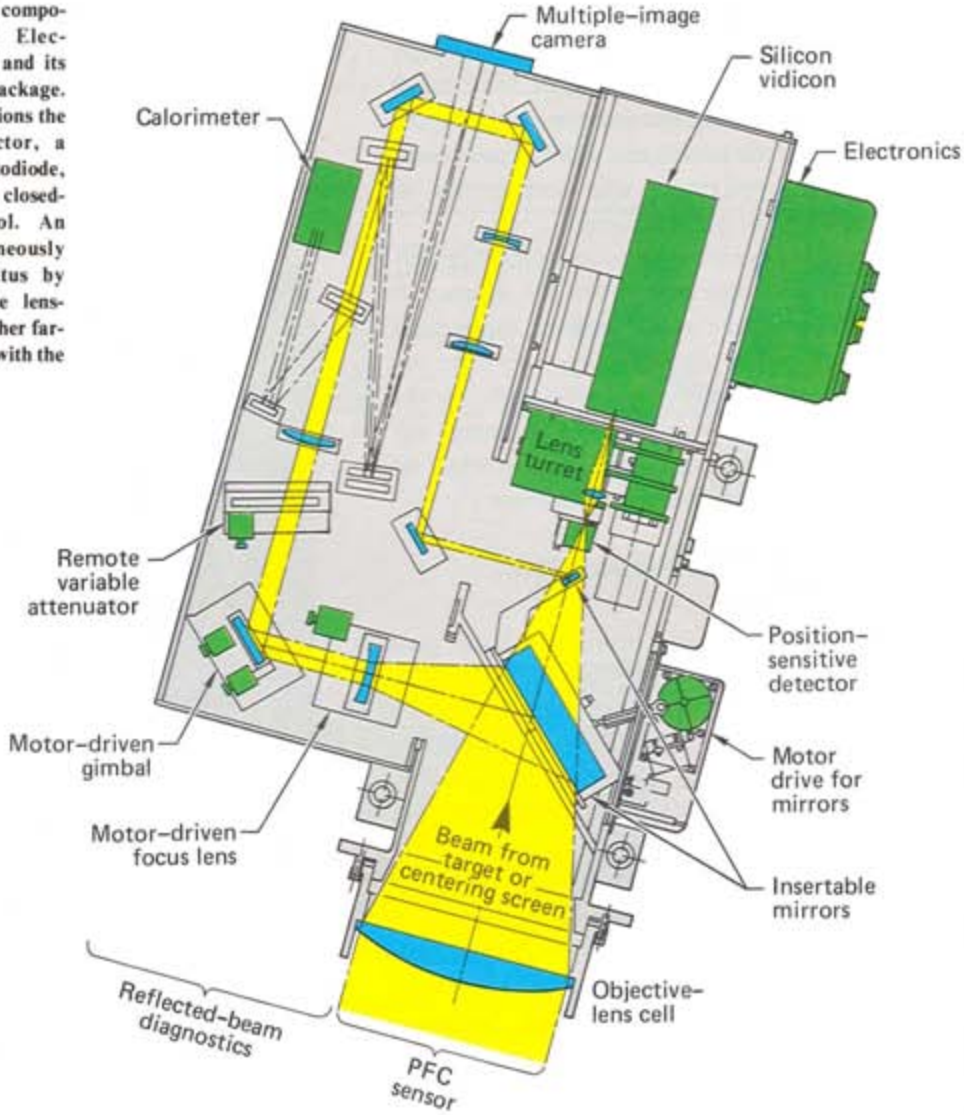

Fig. 7. The principal components of an Aerojet Electrosystems PFC sensor and its attached diagnostics package. During alignment operations the position-sensitive detector, a lateral-effect silicon photodiode, provides error signals for closed-loop automatic control. An operator can simultaneously monitor alignment status by selecting an appropriate lens-turret position to view either far-field or near-field planes with the vidicon camera.

1 mm, which is 0.5% of the 20-cm beam diameter, is readily detectable by this technique.

Pointing at the Surrogate Target. A typical laser fusion target is far too small to serve as a convenient reference for an automatic output pointing system. Therefore, we initially align the beams with respect to a spherical surrogate target 5 mm in diameter. Both the surrogate and the much smaller fusion target are pictured on the cover of this issue. This approach assumes that we can accurately replace the surrogate with the fusion target and that each beam can be precisely offset from its aligned-to-surrogate position to conform with the irradiation geometry required by the specific fusion target. These capabilities will be discussed later.

To obtain accurate beam pointing, we retract the centering screens and observe the light reflected from the surrogate. As shown in Fig. 8, the beam now reflects from the surrogate target back through the focusing lens and the output pointing mirror and into the PFC sensor. Because the sensor is imaging the plane formerly occupied by the centering screen, any offset of the reflected beam as it passes through that plane generates an error signal from the sensor. When the incident beam is pointed at the target with its central ray perpendicular to the surface, the offset and the error signal disappear.

The 1.2-m focal length of the focusing lens and the choice of a 5-mm diameter for the surrogate target combine to give a 1.2-mm offset of the reflected beam for each microradian of departure from perfect pointing. This scale factor is inversely proportional to the diameter of the surrogate target. If we tried to adjust the beam pointing with a surrogate as small as the laser fusion target, the scale factor would be so large that we would get a return signal only if the beam were already almost perfectly pointed.

The PFC microprocessor calculates motor commands for the output pointing gimbal only, because a typical pointing correction causes a negligible change in beam centering at the lens. The PFC microcomputer processes the data from all 20 PFC sensors simultaneously, making it possible to complete automatic pointing to the surrogate target with microradian accuracy in just a few minutes. As

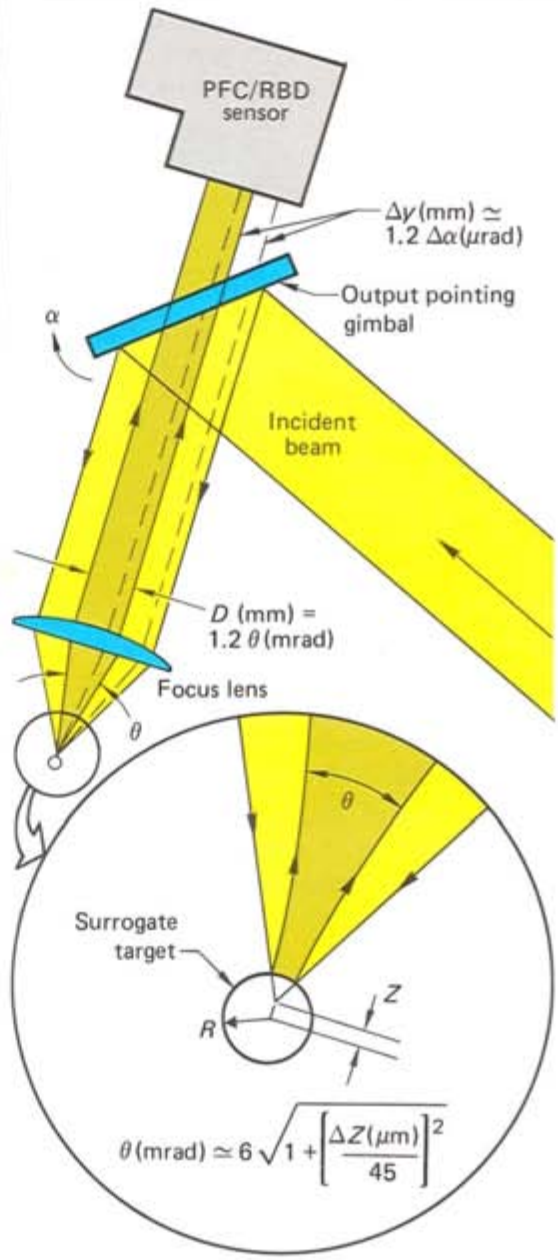

Fig. 8. Operation of the PFC system in the pointing and focus modes is based on the relationships shown in this schematic drawing. To obtain the proper pointing, the mirror angle α is changed until $\Delta y = 0$. Focusing to the half-radius point on the surrogate target is achieved by slewing the focus lens along the beam axis until the spot diameter D is minimized. In the inset equation for the divergence of the beam reflected from the surrogate, $\Delta Z = Z - R/2$, and $R = 2.5$ mm for the 5-mm surrogate target used in Shiva.

with the beam centering task, operation of the system in the pointing mode can be monitored and verified on the operator's TV screen.

Focusing on the Surrogate Target. Moving the focusing lens toward or away from the surrogate target causes the diameter of the reflected beam to vary. Analysis reveals that the smallest diameter is obtained when the incoming beam is focused toward a point halfway between the center and the front surface of the surrogate, i.e., when $Z = R/2$ as in the inset of Fig. 8. Then the reflected beam is collimated at the surrogate surface and expands by diffraction as it propagates back toward the lens. For $Z > R/2$ the reflected beam comes to a focus a short distance in front of the surrogate surface and then diverges back toward the lens. For $Z < R/2$, the reflected beam will appear to come from a focus somewhere behind the target surface and diverge toward the lens. In either case the divergence angle is given by the equation in the figure, where $\Delta Z = Z - R/2$. Since the apparent source of the reflected light is always approximately one focal length from the lens, the reflected beam is very nearly recollimated between the lens and the sensor for all Z values of interest.

Lens positioning to achieve the $Z = R/2$ focus condition on the surrogate is presently performed by a system operator who remotely drives the focusing lens along the beam axis until the spot seen on his television monitor is at its smallest and brightest. However, digital processing of video information, as previously described in the section on spatial filter pinhole positioning, will also make it possible to automate output focusing.

PULSE SYNCHRONIZATION

Proper target performance depends strongly on simultaneous arrival of the pulses from all 20 beams. The Shiva pulse synchronization system (PSS), which was designed and built by Hughes Aircraft Company, assures simultaneity to better than 5 ps.

The operation of this system is illustrated in Fig. 9. The PSS neodymium–YAG laser injects a cw mode-locked pulse train into the preamplifier beam line, where the oscillator alignment system aligns it to the same reference as the pulsed and cw beams. We then shutter off all but one amplifier chain, and the PSS pulse train propagates down that chain to a surrogate target on which the output beams have been previously aligned.

The reflected laser beam returns to the PSS attenuated by 70 to 80 db due to round-trip transmission loss and is heterodyned with a frequency-shifted portion of the laser output from a local reference arm. The amplitude of the beat-frequency signal depends on the relative optical path lengths of the reference path and the signal path, with maximum signal occurring when each reflected pulse returning along the signal arm to the detector overlaps exactly in time with a pulse from the reference arm. This happens when the signal-arm length is an exact multiple of the reference-arm length.

We obtain the required adjustment accuracy and a convenient display by switching between two reference arms of slightly different lengths at a rate of 640 Hz and applying the difference of the two heterodyne amplitudes to an output meter. The meter shows a well defined null when the two heterodyne signals are equal. Because the heterodyne signal amplitude drops off equally for positive and negative errors in timing, the null occurs when the length of the signal arm has been adjusted to match the average length of the two slightly different reference arms.

We adjust the path length of the amplifier chain by changing the length of an optical delay line, indicated in Fig. 1 by the loops in the optical path at the input end of each amplifier chain and in Fig. 9 by the box labeled "motor-driven path length adjustment." When each amplifier chain has been successively switched in and its optical path length has been adjusted to give a meter null, all the path lengths to the target are equal and the pulse arrival times are the same.

TARGET EXCHANGE AND BEAM OFFSETS

Since the PFC system positions all of the beams in a well-defined way with respect to a surrogate target, we next must remove the surrogate and

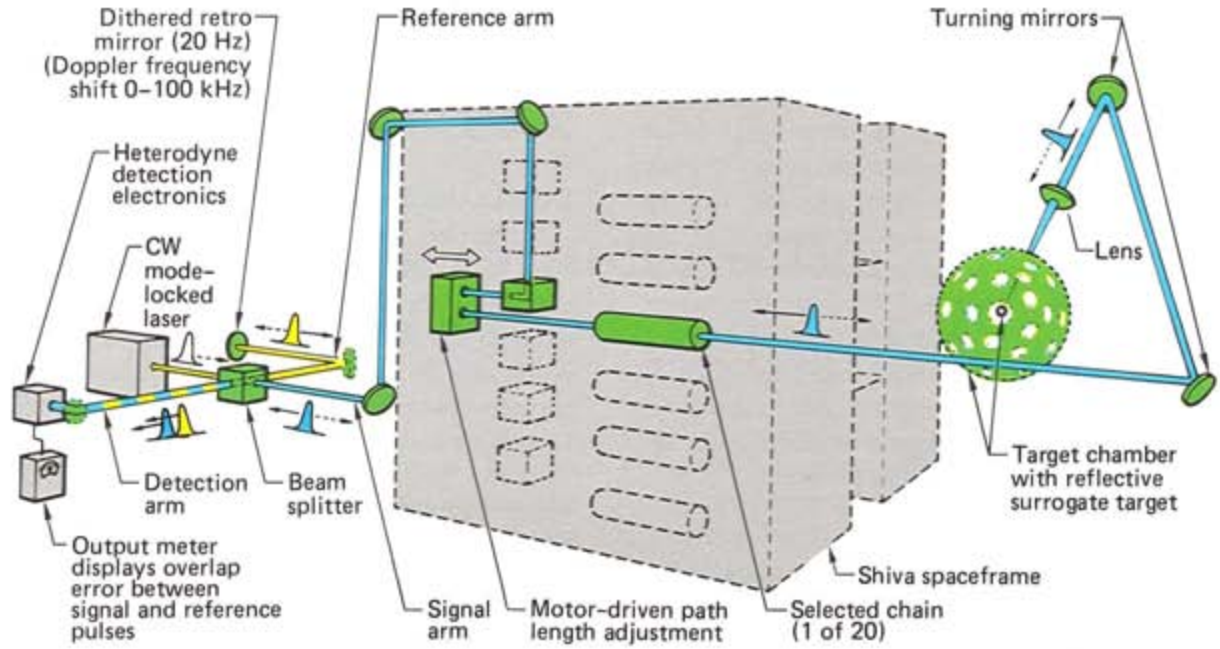

Fig. 9. Installation of the Hughes pulse synchronization system (PSS) on Shiva. After a particular beam has been aligned to the surrogate target, it will be reflected back not only into the PFC sensor, but also back toward the front of the laser. Taking advantage of this effect, the PSS combines the part of its cw mode-locked output that is reflected from the surrogate with a frequency-shifted portion of the output from a local reference arm. The maximum amplitude of the heterodyne signal occurs when each reflected pulse exactly overlaps in time with a pulse from the reference arm, and this occurs when the optical path length through the laser to the surrogate target and back is an exact multiple of the reference-arm length. Matching each separate chain, one at a time, to the same fixed-length reference arm assures simultaneous pulse arrival at the target to within 5 ps.

replace it with the real target before firing the system. The two targets are mounted on a common stalk, as seen in the cover photo, and are easily interchanged using the motor-driven target positioner. However, it is impossible to monitor this exchange with the desired accuracy of 5 μm using standard viewing instruments and TV monitors because the surrogate is 1000 times larger than the resolution required and would therefore exceed the approximately 500-line TV field of view.

The Shiva target-positioning viewers use a multiple-field design to meet these conflicting requirements of high resolution and large field of view. The viewer has a self-contained light source, which in combination with a retro-reflector array provides both front and back illumination of the target. An optical relay with unity magnification images the target plane onto a fixed reticle that is used as the positioning reference for both the target and the surrogate. The reticle pattern consists of a central cross and concentric circles ranging in diameter from 250 μm to 5 mm. A magnifying lens relays the combined target and reticle image into the object plane of five field lenses, which finally transfer the image to the TV vidicon.

The five-lens cluster consists of four lateral lenses 90° apart on a circle plus a central lens. The central objective views the center of the reticle, and the four lateral lenses view four different points on the circumference of the surrogate target. Prisms fold the rays from the four lateral lenses so that their images are in focus and within the available field provided by the effective area of the TV detector. We have so aligned the lateral optics that the four images appear on the four corners of the TV screen, leaving the central area free for viewing the laser fusion target when it is inserted.

With a fusion target in place, the final step before

the system can be fired is to translate the focus lenses slightly so as to move the beams to the target coordinates specified by the shot plan for that particular target. Since each beam is known to be pointed directly at the center of the target and focused 1250 μm ($R/2$ for a 5-mm-diam surrogate) in front of it, the required focus-lens motions can be calculated by a simple computer program at the control console. The operator enters the 20 desired beam positions, and the lens-drive microprocessor sends the appropriate offset commands to the three stepper motors associated with each lens. A set of transducers with 2 μm resolution, mounted one on each translation stage, enables us to compare the actual motion with the commanded motion.

ALIGNMENT VERIFICATION

Although completion of all the preceding steps can in principle guarantee that each beam is positioned on the target to better than 10 μm in the transverse direction and 50 μm in focus, some level of verification is frequently desired before committing to the shot. The PFC/RBD sensor shown in Fig. 7 provides a way to obtain such verification for transparent targets.

Two of the PFC lens turret positions image the target plane on the silicon vidicon with different magnifications. Inserting the PFC system's internal mirrors and routing the beam through the RBD part of the sensor make available additional magnification and the capability for internal focus and offset adjustments. With the target backlighted from the opposite side by a remotely insertable illuminator, the sensor produces an image of the fusion target whose position can be marked on the TV screen. When the illuminator is removed, we see an image of the opposing beam in the target plane so that its position and size can be visually compared with expectations.

CONCLUSION

A complete alignment sequence for the Shiva fusion laser involves more than 600 separate motorized adjustments and a number of manual support activities. The successful accomplishment of this task on a daily basis testifies to the efforts of personnel from both private industry and Lawrence Livermore Laboratory in planning, building, and installing the alignment systems and the controls to which they are interfaced. It is to the further credit of operating personnel that they continue to find ways to make system operation more efficient and more reliable. The Shiva alignment systems provide a solid base of experience on which to build for the increased demands of the Nova 40-beam facility and for other large systems that may follow.

Key Words: automatic alignment—laser; laser fusion; microcomputer control; Nova; pulse synchronization; Shiva; spatial filtering; target positioning.

NOTES AND REFERENCES

1. The construction and operation of the Shiva laser is discussed in "The Solid-State Laser Program," *Energy and Technology Review*, August, 1977 (UCRL-52000-77-8), p. 13.
2. James W. Greenwood, Frederick W. Holloway, Robert G. Ozarski, and Paul R. Rupert, "Control for the Shiva Laser System," *Industrial Research*, November, 1977, p. 60.