UCRL-52000-76-1

Energy and Technology Review

JAN. 1976

Prepared for U.S. Energy Research & Development Administration under Contract No. W-7405-Eng-48

HOLOGRAPHIC STUDIES OF LASER DISKS

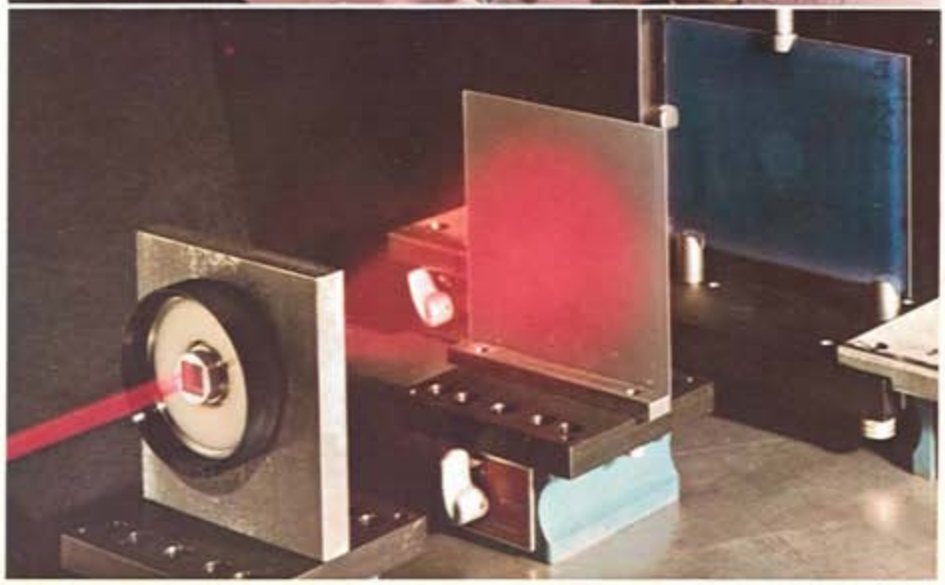

LAWRENCE
LIVERMORE
LABORATORY

LASERS AND LASER APPLICATIONS

HIGH-RESOLUTION HOLOGRAPHIC INTERFEROMETRY: A NEW TECHNIQUE

The Laboratory has developed a new, more precise technique for measuring the wavefront distortion of plano-optical elements, such as laser disks. With this technique – a variation of double-exposure holographic interferometry – we can measure the distortion of an element with an accuracy of $\lambda/100$ (one-hundredth of a wavelength), compared with about $\lambda/20$ for conventional interferometry. This high-resolution capability will aid in the evaluation of individual elements as well as in the assembly of large laser systems to minimize total wavefront distortion.

Glass laser systems typically have up to 100 separate optical elements (laser disks, polarizers, lenses, etc.), each of which introduces a small distortion in the laser beam. Cumulatively, these small distortions may produce a significant spatial modulation of beam intensity at the target in laser-fusion experiments. This problem can be controlled by suitably finishing and measuring the quality of all laser components or by compensating for the phase distortion with a correcting optical element.

To understand and control beam aberrations, it is often necessary to measure the wavefront distortion of optical elements with a much higher degree of accuracy than is afforded by conventional interferometry. Adjacent fringes in a conventional interferogram correspond to a phase difference between the interfering beams of 2π, or an equivalent optical-path difference of one wavelength. By interpolating between fringes, we can increase resolution to about 1/20 of a wavelength. If we select optical elements for a laser system on this basis, 100 elements could produce an overall distortion of about three wavelengths. Calculations have shown that a wavefront distortion of only one-half wavelength can result in intensity modulations of up to 75% at the focus of a lens. At the surface of a laser-fusion target – in the intermediate field – the modulations are less intense but still objectionable.

Contact Gary E. Sommargren (Ext. 8573) for further information on this article.

OPTICAL SYSTEM REQUIREMENTS FOR FUSION LASERS

The LLL Laser Program has been conducting an intensive research effort to develop high-peak-power, neodymium glass laser systems for target irradiation. These systems are designed to provide the energy, power, and wavefront uniformity required to spherically implode nuclear fuel targets and achieve thermonuclear fusion through inertial confinement. Several such systems are in operation or under construction.

The requirements on the optical performance of fusion lasers are staggering. Targets as small as 100 μm in diameter must be uniformly irradiated with multiple beams each delivering between 100 and 1000 J of energy. This energy must be delivered in a single, time-tailored pulse whose peak power exceeds 1 TW. To achieve the requisite uniformity and brightness of illumination at this power level, we must thoroughly understand numerous linear and nonlinear propagation phenomena.

To obtain a high-quality beam from the output of a high-power laser system, one must solve all of the usual problems of large optical systems. However, the most difficult problem relating to beam quality is not usually faced in designing optical systems. That is, the index of refraction of all optical elements through which the laser beam passes depends on the beam's intensity. The effect of this interaction between laser radiation and laser disks is that any small intensity irregularity in the beam induces a lens for itself. The induced lens causes the irregularity to be focused and become more pronounced, which in turn induces a stronger lens; so the irregularity grows in dramatic fashion. This self-focusing instability limits the peak power from present Nd:glass laser systems.

At lower power levels, where the aberrations due to self-focusing are not apparent, passive aberrations in the laser optical elements limit the focusing properties of the laser beam and cause nonuniform intensity distributions at the laser focus. We have made dramatic progress in not only measuring but also controlling linear and nonlinear beam distortion in Nd:glass lasers. The accompanying article discusses a recent development in our ability to measure small aberrations in optical components.

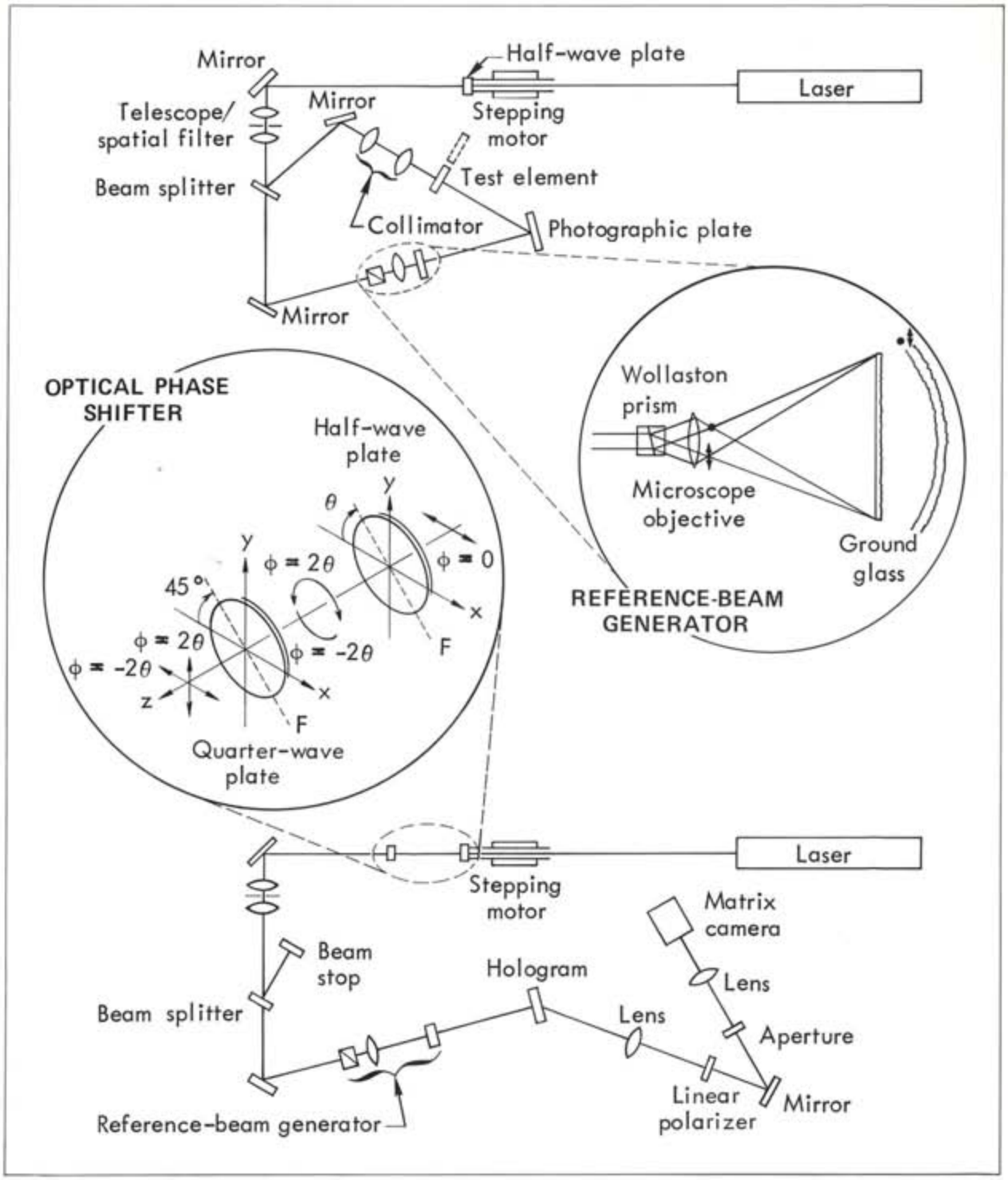

Fig. 1. Experimental setup for recording (top) and reconstructing (bottom) the double-exposure hologram. The two unique components distinguishing this setup from conventional holographic interferometry are shown in the two insets: a polarization-dependent, common-path reference-beam generator (right) and an optical phase shifter (left). In the reference-beam generator, the input beam's vertical (dot) and horizontal (arrow) components are transmitted by a Wollaston prism and microscope objective onto a ground-glass screen, which generates the two uncorrelated, orthogonally polarized speckle patterns used to record and reconstruct the hologram. The optical phase shifter allows precise control of the relative phase ($\Delta\phi$) between the two reference beams used in reconstruction. The laser input beam to the optical phase shifter is linearly polarized in the horizontal direction; the output is two beams orthogonally polarized in the horizontal and vertical directions with a phase difference of 4θ.

To measure wavefront distortion with higher phase resolution, we first need a method that is independent of the quality of the auxiliary optical elements. Double-exposure holographic interferometry is one such method. It provides a measure of the difference between two states of the optical test system, thereby eliminating the effect of the auxiliary optical elements present for both exposures. It does not provide adequate resolution, however. As with conventional interferometry, adjacent fringes in the resulting interferogram correspond to an optical-path difference of one wavelength. Although different schemes have been devised to interpolate between fringes and increase resolution, they are all necessarily based on comparing intensities between different spatial positions in the interferogram. Because intensity depends not only on phase variations but also on the intensity profiles of the interfering beams and on the detector's nonlinearity, these schemes are limited to a modest gain in resolution.

If we could continually vary the relative phase of the interfering beams, however, the intensity at different times (but at the same spatial position) could be compared. For a relative phase change of 2π, the intensity at every position in the interferogram would vary sinusoidally through one period. The phase of these variations would then be precisely equivalent to the wavefront distortion of the optical element under test.

We have developed a variation of double-exposure holographic interferometry that allows us to produce these sinusoidal variations and thus to measure plano-optical elements with an accuracy of $\lambda/100$. The resulting measurement is in the form of a computer-generated phase array. From these arrays, both contour and three-dimensional perspective plots of wavefront distortion can be displayed. The computer can also use these arrays to choose individual elements and their orientation so as to minimize wavefront distortion for a particular laser system.

New Interferometry Technique

Starting with the experimental setup and procedure of conventional double-exposure holographic interferometry, we have added two unique components: a polarization-dependent, common-path reference-beam generator and an optical phase shifter. It is the combination of these components that permits high phase resolution.

Our basic experimental setup for recording the two holograms is shown in the top diagram of Fig. 1. The source here is a helium:neon laser with a linearly polarized output beam. This beam passes through a half-wave plate mounted in the hollow shaft of a precision stepping motor. By rotating the half-wave plate, we can introduce any orientation of linear polarization into the optical system. The polarized beam is then split at a beam splitter; the object beam passes through a collimator and on to the photographic plate, the reference beam passes through the reference-beam generator. This latter component, shown in the right inset of Fig. 1, generates either one of two reference beams or both simultaneously, depending on whether the polarization of the input beam is horizontal, vertical, or a linear combination of both.

The input beam generally contains both horizontally and vertically polarized components. In the reference-beam generator, they are transmitted with a slight angular divergence by the Wollaston prism and focused with a microscope objective to produce two point sources with a small separation (approximately 60 μm). These sources illuminate a ground-glass screen, which then generates two orthogonally polarized speckle patterns at the photographic plate. The speckle patterns are uncorrelated because of the small but finite separation of the point sources. When the input beam contains only horizontal or only vertical components, just one of the reference beams is generated.

To record the first (initial-state) hologram, we set the half-wave plate so that the laser beam is horizontally polarized and then make an exposure of the test element. Next, the test element is removed from the beam (shown dotted in Fig. 1), while the half-wave plate is rotated 45° to give a vertically polarized beam. The second (final-state) hologram is then exposed, and the photographic plate is removed, processed, and replaced in its original position.

Our experimental setup for reconstructing the holograms is shown in the bottom diagram of Fig. 1. Note that here a quarter-wave plate is placed after the half-wave plate. These two elements comprise our second unique component, the optical phase shifter, shown schematically in the left inset. When a horizontally polarized beam passes through the half-wave plate, which is oriented with its fast axis (F) at the angle θ, a linearly polarized beam with an orientation of 2θ is produced. This beam, however, may also be thought of as the combination of two beams of opposite circular polarization with a relative phase difference ($\Delta\phi$) of 4θ. When the beam next

passes through the quarter-wave plate, these orthogonal circular polarizations are converted to horizontal and vertical polarizations that preserve the 4θ phase difference.[1] The relative phase between the two beams can therefore be precisely controlled by the stepping motor, in incremental steps of $2\pi/500$.

To reconstruct the holograms, we only use the system's reference-beam arm. From the optical phase shifter, the two polarized beams pass through the reference-beam generator to produce both reference beams simultaneously, which then illuminate the holograms. The two reference beams and two holograms give a total of four reconstructions. Each reference beam and its uncorrelated hologram produce a noise background. Each reference beam and its correlated hologram produce a reconstructed wavefront. Because these wavefronts are orthogonally polarized, no interference occurs. It is therefore necessary to image them through a linear polarizer oriented at 45° to produce an interferogram.

A photograph of our optical test apparatus is shown in Fig. 2. The resulting double-exposure hologram gives the interference between the wavefront that passes through the optical element under test and the wavefront that passes through the air occupied by the element. The advantage of this technique over conventional double-exposure holography is that the relative phase between the reconstructed wavefronts can be precisely controlled by varying θ. Then interfacing to a computer and using synchronous detection, we can determine the wavefront distortion of an optical element with great accuracy.

Holographic Data Analysis

The coupling of the optical test apparatus to the computer system is shown schematically in Fig. 3. The interferogram is detected by a self-scanned photodiode matrix camera free running at about 50 ms per frame. Video signals (i.e., photodiode levels) and their associated clock pulses, along with the end-of-line and end-of-frame synchronization pulses, are sent to the controller. The controller, which was specifically designed for this system, then sends the video information and synchronization signals to the computer and sends appropriate pulses to the stepping motor.

From the video information, the coincident and quadrature components of the intensity at each photodiode position are calculated as θ varies through a total of $\pi/2$. The phase at each position is then calculated from these components and stored in an array. This phase array is searched for 2π discontinuities and corrected until the phase is continuous over the entire array. Finally, the phase at the center position is subtracted from all positions, making the center position a reference point with phase zero.

The maximum values of the phase array are displayed on the terminal screen, after which the operator keys in an appropriate contour interval. A phase contour map of the test element's wavefront

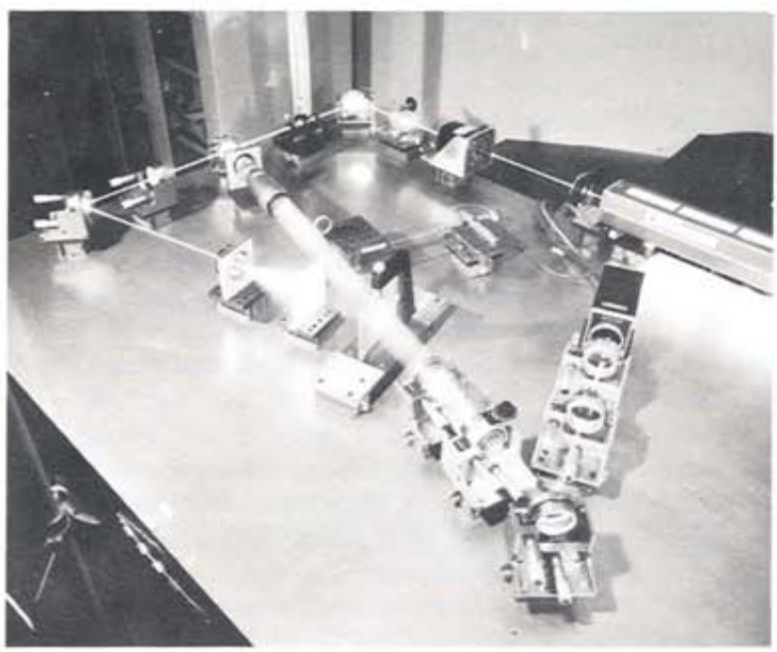

Fig. 2. Optical test apparatus (shown in reconstruction configuration) for measuring wavefront distortion. The "pencil" beam of laser light is shown going through the reference-beam arm of the optical system, finally dispersing through the ground-glass screen (white square) and onto the hologram in the black plate holder. The diffuse beam represents the path the object beam would follow – from the collimator, through the test element (displaced aside here), and onto the photographic plate – in the recording step. When a hologram is reconstructed, however, this beam is stopped after the beam splitter; it is shown here simply for illustration. To the right of the hologram, the reference beam passes through a lens and linear polarizer, reflects off a mirror, and then passes through an aperture and another lens to the matrix camera (black box).

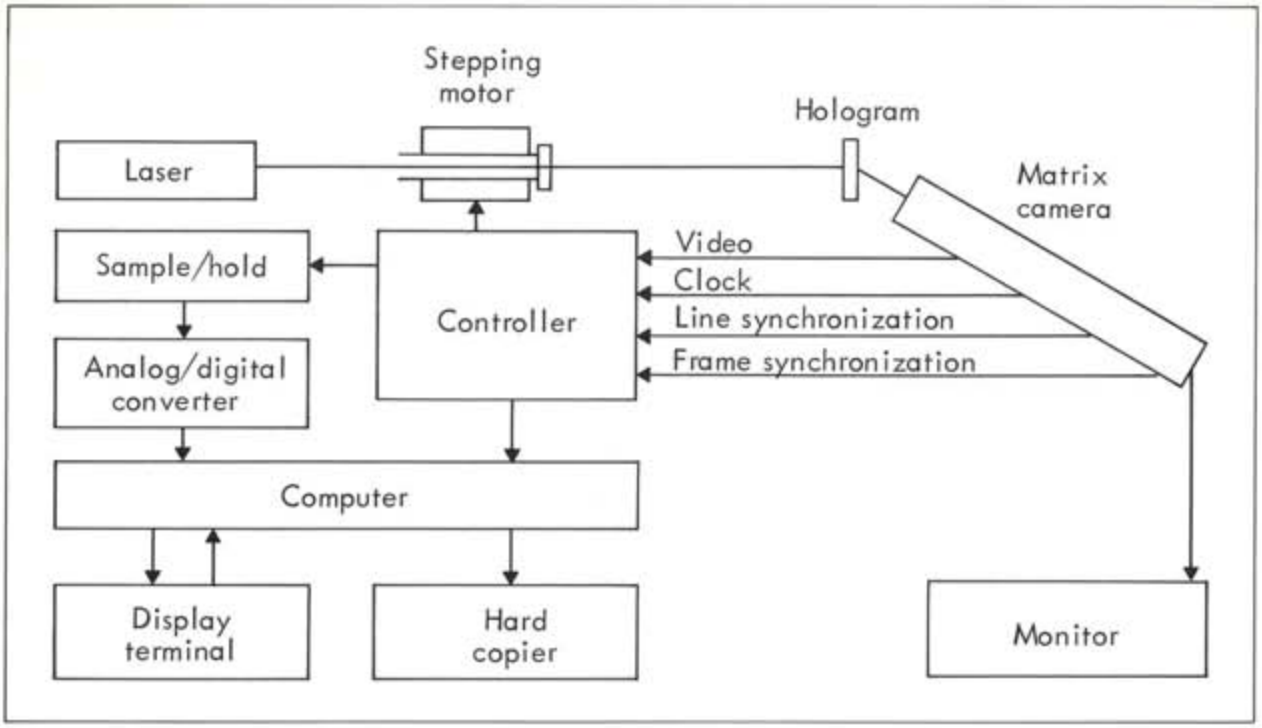

Fig. 3. System diagram for the modified holographic interferometry technique developed at LLL. The optical test apparatus is represented at the top here in condensed form.

distortion is then displayed on the screen. To aid the operator in distinguishing maxima from minima, a three-dimensional perspective plot is also displayed. Printed copies of these plots, as shown in Fig. 4, can be made at this time and the phase array may be put in long-term storage for future use.

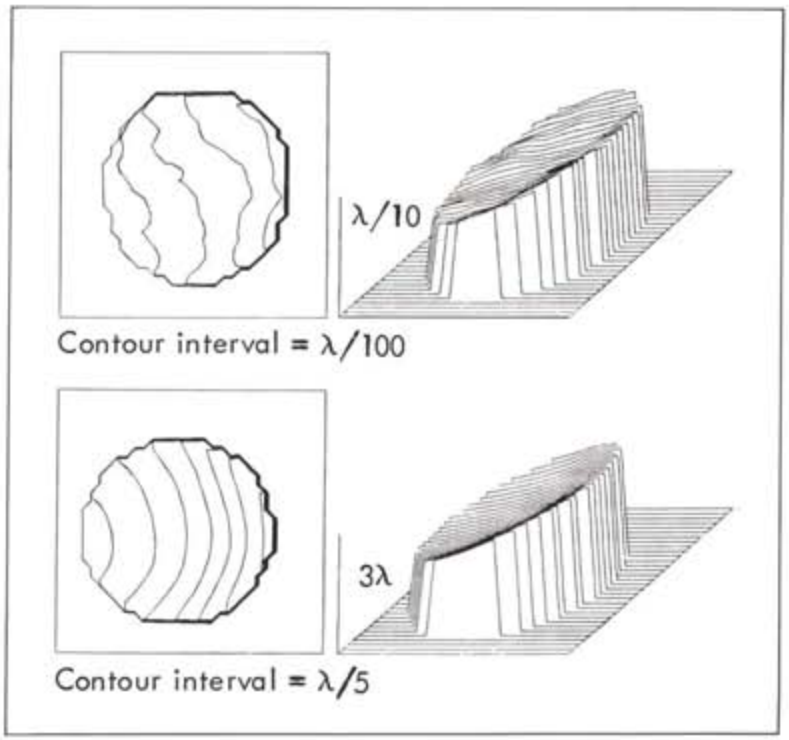

Fig. 4. Measurements of wavefronts transmitted by good- (top) and poor-quality (bottom) glass disks. For the ideal glass disk, the top of its perspective plot would be perfectly smooth and horizontally level.

To measure the errors inherent to our system, we made a double-exposure hologram without the presence of a test element. In theory, the phase array from such a hologram should be zero at each position; because of air turbulence between exposures, we found that accuracy was limited to about $\lambda/100$ over the entire array. This is much higher resolution, however, than is possible with conventional holographic interferometry.

We have used our modified technique to measure the wavefront distortion of a number of glass disks. Sample results for a good- and a poor-quality disk are shown in Fig. 4. On the basis of such plots, we can first establish more stringent criteria for selecting optical elements, and second, compensate for those distortions still introduced into the laser system. From the phase arrays stored in its memory, the computer can determine the optimal assembly of these elements to minimize total distortion of the entire laser system.

To date, the disks tested have been only 50 mm in diameter, but larger elements can be similarly measured simply by changing the collimator and adding a collecting lens after the test element. Our test apparatus can thus be adapted to measure the wavefront distortion of the optical elements needed for any laser system.

Further Applications

Although our new interferometry technique is described here in terms of evaluating optical elements, it is not restricted to this application. In a more general configuration, the test apparatus can also be used to measure extremely small differences between two states of any object (solid, liquid, or gas) altered between exposures. The test object may be either specular or diffuse, reflecting or transmitting.

For example, we have used our test apparatus to measure the surface deformation of a steel bar due to cooling. From such measurements, the coefficient of thermal expansion can be calculated with great accuracy. In general, by applying this technique to those areas of nondestructive testing where conventional holographic interferometry is presently used, we can increase measurement accuracy by a factor of 10 to 100.

Key Words: holography; interferometry; interferometry – instrumentation; laser – applications; laser interferometry; optical testing; wavefront reconstruction.